LAVINA®

# LAVINA® 16-S-E User Manual


SUPERABRASIVE

CE

www.superabrasive.com / factory@superabrasive.com

## Contents

# 1. GENERAL INFORMATION

This owner's manual is intended for the operator of the Lavina® 16-S-E machine, the servicing technician as well as for anyone involved with operating or servicing the machine. We recommend that you read the instructions very carefully and follow them strictly. The manual includes information about assembling, using, handling, adjusting and maintaining your Lavina® 16-S-E floor grinding and polishing machine.

**MANUFACTURER**

Superabrasive was founded in 1987, as a manufacturer of high quality diamond tools for the stone and concrete industry. Today, Superabrasive is one of the world's leading companies in the production of diamond tools and floor grinding machinery. At Superabrasive, we strive to deliver the very best solutions to our customers, and enable them to work more efficiently.

**GENERAL DESCRIPTION**

The Lavina® 16-S-E machine is intended for grinding, polishing and buffing concrete, marble, granite, limestone and terrazzo surfaces with diamond tools.
The Lavina® 16-S-E is a three-disc machine, which can be used dry as well as wet.
For best results, use only tools manufactured or recommended by Superabrasive and its distributors. Additionally, the machine could be used for grinding wood floor surfaces.

⚠ WARNING

The Lavina® 16-S-E machine is manufactured and fitted for the above-mentioned applications only! Every other use may possess risks to the persons involved.

**MACHINE CHARACTERISTICS**

The Lavina® 16-S-E is made of two main component sections:

Figure 1.1

**LAVINA® 16-S-E MAIN DESIGN**

- **The two main component sections**, the carriage (1) and main head (2).

The handle on the frame is adjustable in height and allows the operator to work in a correct and safe posture.

- **The controls** are positioned on top of the frame (fig.1.2)

- **The electrical box** (fig.1.3) contains the electric switching devices and the inverter. The motor feeding cable and the main feeding cable are plugged in the socket located on the bottom of the box.

Figure 1.2

- **The water tank** is on the opposite side of the frame, so that the weight of the water has no influence on the operation of the machine. The frame weight, on the other hand, is fully absorbed by the driving wheels.

- **The motor** is mounted on the base plate and is driving the three heads with a belt system. The planetary head is driven by a second flat belt.

**ENVIRONMENTAL CONDITIONS**
The temperature range for operating the Lavina® 16-S-E outdoors is between 41°F and 86°F or 5°C and 30°C. Never use the Lavina® 16-S-E during rain or snow when working outdoors. When working indoors, always operate the machine in well-ventilated areas.

**ELECTRICAL CONNECTION**
The voltage (Volt) and power (Ampere) are displayed on a label on the electrical control box to avoid any incorrect connection. Refer to these before connecting the power. To avoid electrical shocks, make sure the ground power supply is functioning properly.

**VACUUM CONNECTION**
A connection for a vacuum dust extractor is located on the carriage. The Lavina® 16-S-E does not include a vacuum dust extractor. The customer must purchase the vacuum dust extractor separately. The hose of the vacuum extractor must be Ø 40 mm and can be glided over the pipe. The vacuum dust extractor must be adapted for floor grinders and have a minimum air displacement of 320m3/h with a negative vacuum of 21 kPa.

**TECHNICAL DATA**

| | Lavina® 16-S-E | |
|---|---|---|
| Voltage/Hz | 1 ph x 200-240 V 50/60Hz | |
| Amperage | Max 12 Amps | |
| Power | 2,2 kW | 3 hp |
| Tool holder rpm | 300-1100 rpm | |
| Working width | 417 mm | 16.4" |
| Tool diameter(QC Plate) | 3 x 178 mm | 3 x 7" |
| Weight | 104 kg | 230 lbs |
| Grinding pressure | 63kg | 139 lbs |
| Additional weight | max 1x10 kg | 22 lbs |
| Application | wet and dry | |
| Vacuum hose port | yes | |
| Water tank capacity | 10,5 l | 2.8 gal |
| Water feed | Peripheral | |
| Cable length | 17.4 m | 57 ft |
| Machine LxWxH | 1160x430x1070 mm | 45.7"x16.9" x42" |
| Packing LxWxH | 1150x730x1155 mm | 45.2"x28.7"x45.5" |

**CE-CERTIFICATION**
The Lavina® S-E machine is designed to operate correctly in an electromagnetic atmosphere of industrial type and is equipped with all the mechanical and electrical safety protections in conformity with the following European CEE rules and regulations:
The Lavina® S-E machine complies with the Safety Directive for machines 2006/42/EC, the EMC Directive 2004/108/EC and the Low Voltage Directive 2006/95/EC.
Also complies with the norms in use BDS EN ISO 12100-1, BDS EN ISO 12100-2, BDS EN 13862, BDS EN ISO 13857, BDS EN 349, BDS EN ISO 13850, BDS EN 13732-1, BDS EN 953, BDS EN ISO 13849-1, BDS EN 1037, BDS EN 1837,BDS EN ISO 11201, BDS EN ISO 3744:2010, BDS EN 1033:2002, BDS EN ISO 14121-1, BDS EN 60204-2, BDS EN 61000-6-4
Test results are a part of the machine's technical information and can be sent upon a special request. The machine is delivered with the CE mark exposed and provided with a EC declaration of conformity.

**VIBRATIONS**
The vibrations of the machine are within the limits of directives and harmonized standards from the European Union when the Lavina® 16-S-E is operated with the recommended tools and in normal conditions.

**SONOROUS EMISSIONS**
The sonorous emissions are within the limits of directives and harmonized standards from the European Union when the Lavina® 16-S-E is operated with the recommended tools and in normal conditions. However, as previously stated, the operator must wear ear protectors.

**LABEL DATA**
The data on the label provides the correct voltage and kW (needed for operational purposes);
Weight (needed for transportation purposes); production year and serial number (needed for maintenance purposes).

**CUSTOMER SERVICE**
For customer assistance and technical support contact your local distributor or contact the producer Superabrasive Ltd. or visit us at www.superabrasive.com , where you can download a copy of this manual.

# 2. SAFETY INSTRUCTIONS

**RECOMMENDED USE** ⚠ WARNING

The Lavina® 16-S-E machine is designed and manufactured to grind and polish concrete, terrazzo and natural stone floors. It can be used for renovations as well as for polishing. The machine is designed for dry or wet use. When using it dry, use a vacuum of appropriate size. For more information, please refer to the chapter on handling the vacuum connection.

**PROHIBITED USE** ⚠ WARNING

**The machine MUST NOT be used:**

- For applications different from the ones stated in the General Description chapter.
- For not-suitable materials.
- In environments which:
- Possess risks of explosion
- Possess high concentration of powders or oil substances in the air
- Possess risks of fire
- Feature inclement conditions.
- Possess electromagnetic radiation.

**PREPARATION FOR WORK** ⚠ WARNING

**Make sure that:**

- You have closed the work area, so that no person unfamiliar with operating the machine can enter the area
- The tool plate and tools are adjusted to the machine properly
- There are no missing parts of the machine
- The machine is in upright working position
- The protection devices are working properly.
- The electrical cable is free to move and follow the machine easily. In order to keep the electrical cable from being damaged, no vehicle should cross the zone where electrical cables are situated.

**PROTECTION DEVICES** ⚠ WARNING

- The machine is equipped with several protection devices including the following:
- An emergency stop button
- A protection skirt and a hood for protecting the tool plates.
- These devices protect the operator and/or others persons from potential injuries. Do not remove them. On contrary, before using the machine, please ensure that all protection devices are mounted and function properly.

**ARREST FUNCTIONS** ⚠ WARNING

Functions of arresting of the machine are following:

- Button to stop the motor (category 1)
- Emergency button (category 1)

**SAFE USE** ⚠ WARNING

- The Lavina®16-S-E is designed to eliminate all risks correlated with its use. However, it is not possible to eliminate the risks of an eventual accident with the machine. Unskilled or uninstructed operator may cause correlated residual risks. Such risks are:
    - Position Risks due to operator's incorrect working position
    - Tangling up Risks due to wearing inappropriate working clothes
    - Training Risks due to lack of operational training

**NOTE**: In order to reduce all consequences of the above-mentioned risks, we advise that machine operators will follow the instructions in the manual at all times.

**RESIDUAL RISKS** ⚠ WARNING

- During the normal operating and maintenance cycles, the operator is exposed to few residual risks, which cannot be eliminated due to the nature of the operations.

**BEFORE YOU BEGIN** ⚠ WARNING

- Working area must be clear from any debris or objects.
- A first-time operator must always read the manual and pay attention to all safety instructions.
- All electric connections and cables must be inspected for potential damages.
- Ground wire system of the power supply must be also inspected.
- Perform general daily inspections of the machine and inspect the machine before each use.
- Always inspect the safety devices:
- The emergency break must be clear and working
- The tool protector must be working
- The machine must be clean
- Never operate the machine in the rain!
- Confirm that there are no missing parts especially after transportation, repair or maintenance.
- Before filling the water tank with water make sure the machine is not working and the main switch is turned off.
- Before turning on the machine make sure that the base is placed on the floor, the machine MUST NOT be in an upright position when turned on!

**OPERATING MACHINE** ⚠ WARNING

- When operating the Lavina® 16-S-E, make certain that there is no one, but you around the machine.
- Never leave the machine unattended while working.
- The electrical cable must move freely and must be damage-free.
- The water hose must move freely and must be damage-free.
- Check if the floor, you work on, is not too uneven. If this is the case, it may damage the machine.

**AFTER WORK IS COMPLETED** ⚠ WARNING

- Clean the machine and its surroundings properly
- Empty and clean the water tank
- Unplug the machine and wind up the electrical cable
- Store the machine in a safe place

**THE WORK AREA** ⚠ WARNING

- Make certain that people or vehicles do not enter the work area.
- Avoid cables and hoses being in the way.
- Always check the floor for debris

**PERSONAL PROTECTIVE EQUIPMENT (PPE)** ⚠ WARNING

- Always wear safety shoes when working with the machine.
- Always wear ear protectors when working with the machine.
- All personnel in the immediate work area must wear safety glasses with side shields.
- Always wear safety gloves when changing the tools.
- Always wear clothes suitable for the work environment.

**OPERATOR** ⚠ WARNING

- The Lavina® 16-S-E machine.
- The operator must know the machine's work environment.
- Only one operator at a time can work with the machine.
-

- The operator must be properly trained and well instructed prior operating the machine.
- The operator must understand all the instructions in this manual.
- The operator must understand and interpret all the drawings and designs in manual.
- The operator must know all sanitation and safety regulations pertaining to the operation of
- The operator must have floor grinding experience.
- The operator must know what to do in case of emergency.
- The operator must have an adequate technical knowledge and preparation.

# 3. HANDLING AND TRANSPORTATION

## PREPARING THE MACHINE FOR TRANSPORTATION


Figure 3.1


Figure 3.2


Figure 3.3


Figure 3.4


Figure 3.5

Unplug the motor cable plug from the control box and disconnect the water hose from the main head by pulling it out (Fig. 3.1). Wind the electrical cable on the carriage(Fig. 3.2). Pull out the vacuum hoses(Fig. 3.3).

Release the pin sets (Fig. 3.4) which attach the head to the carriage and dismount the head from the carriage (Fig. 3.5).
The head of the Lavina® 16-S-E has one bar and a support used as handles intended for easy moving and transportation.
The Lavina® 16-S-E is engineered with easy transportation in mind. The ability to dismantle the machine in two parts allows convenient transportation and storage (Fig.3.4).

**STORAGE**
Always store and transport the Lavina® 16-S-E in a dry place. Never transport the Lavina® 16-S-E unprotected; it may be damaged if transported unprotected during rain or snow.

# 4. OPERATION

## PRELIMINARY CONTROLS

Inspect the working area as explained in the safety instructions. For wet use, fill in the water tank when the electrical cable is disconnected. Connect the vacuum extractor and ensure that the vacuum hose is clear and it will follow the machine easily. Plug in the machine and also make sure that the power cord is free to follow the working direction of the Lavina® 16-S-E.

## ADJUSTING AND MOUNTING TOOLS


Figure 4.1


Figure 4.2


Figure 4.3

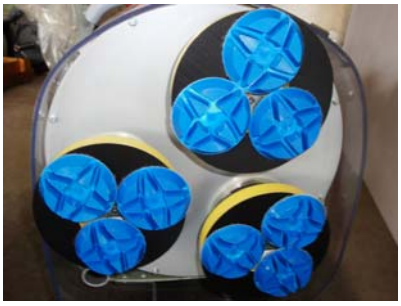
Figure 4.4

Mount the tools only after ensuring that there is enough diamond bond material left. Be sure that the plates are always clean before mounting (Fig.4.1).

WARNING: Secure always the"Quickchange" pads with the security plate (Fig.4.2), lock with the tool holder key (Fig.4.3).Diamond tools with Velcro are attached on three foam plates of 7 inch. The foam plates are mounted on the key lock (butterfly).Always use the tool holder key (Fig.4.4).

**THE CONTROL BOARD**

1. **Emergency button** used in Emergency situations for stopping the motor
2. **Inverter alarm led** lights up if inverter is in alarm mode (see Paragraph Alarm)
3. **Power loss led** Lights by power connection loss (see Paragraph Power loss)
4. **Forward/Reverse switch** choose forward for clockwise rotation of the grinding plates or reverse for anti- clockwise rotation of the grinding plates
5. **ON/ OFF switch-Power led** starts/stops the motor, lights green when the power is on
6. **Potentiometer** changes the RPM of the grinding plates,from 300-1100 rpm

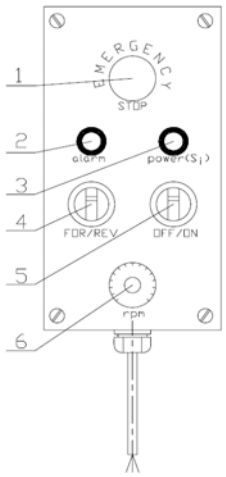

Figure 4.5

**STARTING THE MACHINE**
First, follow the directions in chapter Safety Devices and Safety Instructions. Next, pull the emergency stop (1) to ensure that the machine is in working condition. Check the potentiometer (6) and ensure that it is set at the working speed. If working wet, add water to the floor surface. If working dry, omit this step, and instead, switch on the vacuum unit. Finally, hold the machine firmly and turn the start switch (5).

**OPERATING THE MACHINE**
Guide the machine in straight lines across the floor, and with each new line overlap a little bit of the previously completed surface. Work at a constant speed allowing the tools time to work at a speed appropriate for the tools' grit size. Avoid vibrations. Do not stop the Lavina 16-S machine in one spot while the tools are still working because they will leave marks on the floor surface. When working wet, open the water tank periodically to release water onto the floor surface. When working dry, check the floor surface periodically to ensure that dust is not accumulating on the surface, also check regularly if your vacuum works properly.

**STOPPING THE MACHINE**
The stopping of the machine must be done gradually until the motor stops. Do not stop moving the machine before arresting the motor as the tools could damage the surface. To stop push the off button (5). Use the Emergency button (1) only in emergency or use it to switch the power totally off.
Remember not to hold the machine in one spot before turning off the motor.

**ALARM**
The Alarm led (2) will light incase and stays lighted the inverter is in alarm mode. The most common failure is motor in overload. To reset the alarm mode, disconnect the machine from the power supply.

**POWER LOSS LED**
When the machine stops working and the power loss led (3) flashes means that the power connection is disconnected.

# 5. TOOLS AND ACCESSORIES

## WEIGHTS

Superabrasive offers an additional weight for increasing the productivity of the machine (Fig.5.1). Each additional weight weighs about 21 lbs or 9,8 kg. Each individual application, type and condition of surface, power capacity of the outlet, etc. will determine the number of weights you can use without tripping a breaker. The weight stacks on to three posts around the outer bowl (Fig.5.2).

Figure 5.1

Figure 5.2

The additional weight depends on the tools; it is not always possible to add a weight. Some tools work too aggressively and the machine can stop. The weight can be ordered with item number L16-12.00.00.00

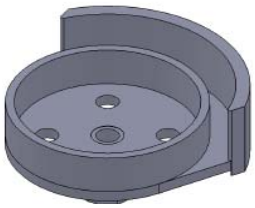

Figure 5.3

## BELT REPLACING TOOL

You need the belt replacing (fig.5.3) tool when you want to replace the belt. It is explained below in chapter Troubleshooting.
This tool can be ordered with number L16-11.00.00.00

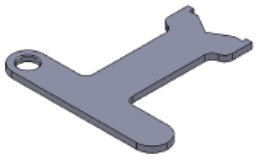

Figure 5.4

## TOOL HOLDER KEY

The tool holder key (Fig. 5.4) is used for adjusting, mounting and dismounting of the tools. Always use the key for mounting. Item number is A03.00.00.00

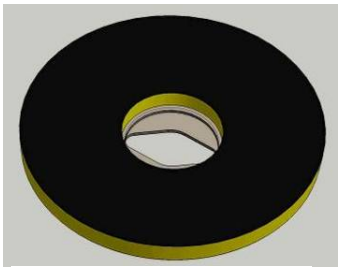

Figure 5.5

## FOAM PLATE

Diamond tools with Velcro are mounted on the foam plate 7"(Fig.5.5). The foam plate is mounted on the "QuickChange"System. Item number is LV-7-FP-S.

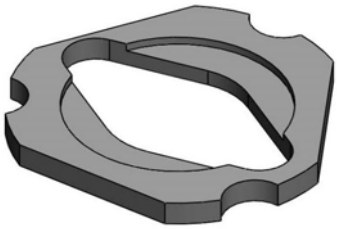

Figure 5.6

## SECURITY PLATE FOR QUICKCHANGE PADS

Plate used to ensure the "Quickchange" pads.
Item number is A38.00.03.

# 6. POPULAR TOOLS

## RECOMMENDED TOOLS

**QuickChange System and Tooling** feature extremely fast and convenient tool changes, and a long tool life, providing for great long-term cost savings. The QuickChange pads are produced in four different bonds for super hard, hard, medium and soft concrete, in a variety of grit sizes. They are offered with 1 or 2 buttons or rectangular segments, which allows you to customize the aggressiveness of the cut.

**Calibra grinding discs**: our popular ceramic bond discs are designed for the removal of difficult scratches and they save you valuable time by eliminating the need for multiple passes with metal tools. They can be used wet or dry, and are best for hard concrete applications.
They are 3-inch, with included Velcro back attachment.

**NATO® polishing discs** feature a special resin formula designed for both wet and dry applications and a unique design with wide channels allowing for work on a cleaner surface and ensuring a quality polish. Available in 3 and 4 in sizes. They are with included Velcro attachment.

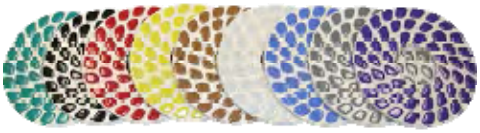

**V-HARR® Premium Polishing Pads** are designed for mechanically polishing and restoring concrete; also ideal for terrazzo and hard stone floors. V-HARR® pads are offered in a wide variety of diameters and grit sizes to accommodate many applications. Dry use is strongly recommended.

**Shine Pro®** are high quality diamond-impregnated pads for floor maintenance. Available in a variety of sizes, and are great for daily use. When used wet, they require only water (no wax or chemicals needed) and are a very environmentally friendly solution for maintaining floors.

Use only Superabrasive's recommended tools see www.superabrasive.com

# 7. EXPLODED VIEW

**GENERAL EXPLODED VIEW (FIG.7.1)**
**MAIN HEAD EXPLODED VIEW (FIG.7.2)**
**TOP COVER EXPLODED VIEW (FIG.7.3)**
**BOTTOM COVER EXPLODED VIEW 1 (FIG.7.4)**

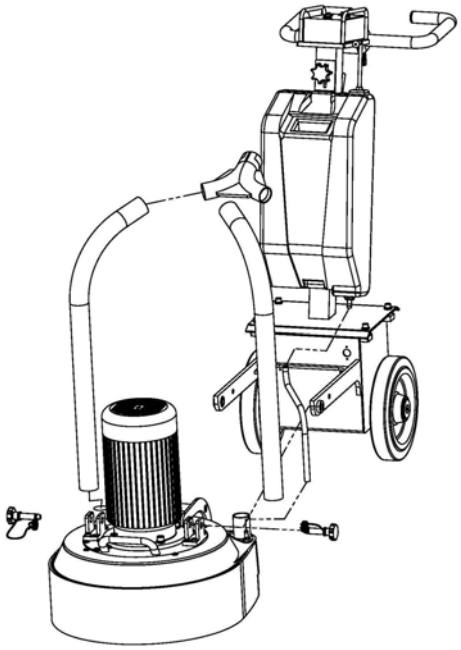

Figure 7.1

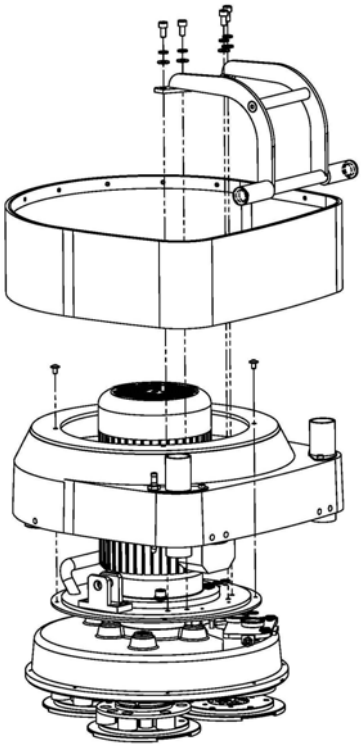

Figure 7.2

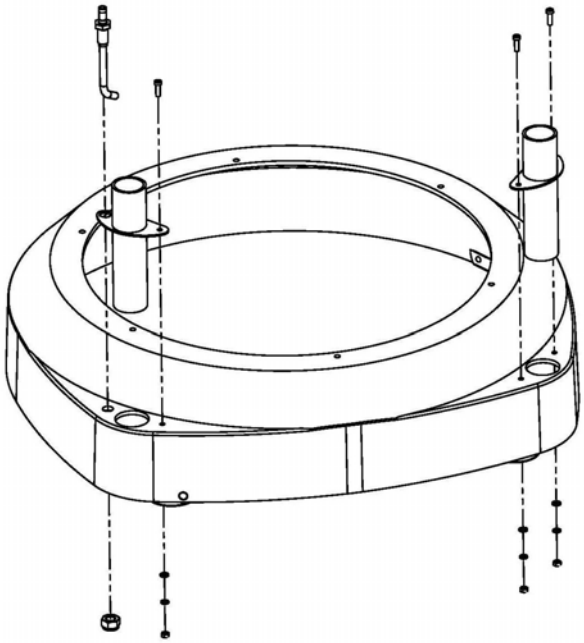

Figure 7.3

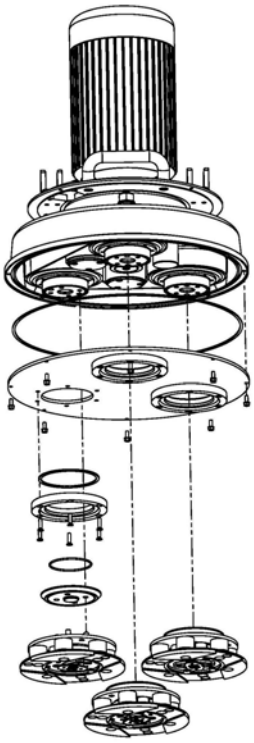

Figure 7.4

**PLANETARY DRIVE EXPLODED VIEW (FIG.7.5)**
**BOTTOM COVER EXPLODED VIEW 2 (FIG.7.6)**
**PULLEY UNITS EXPLODED VIEW (FIG.7.7)**
**CARRIAGE EXPLODED VIEW (FIG.7.8)**
**TOOL HOLDER EXPLODED VIEW (FIG.7.9)**

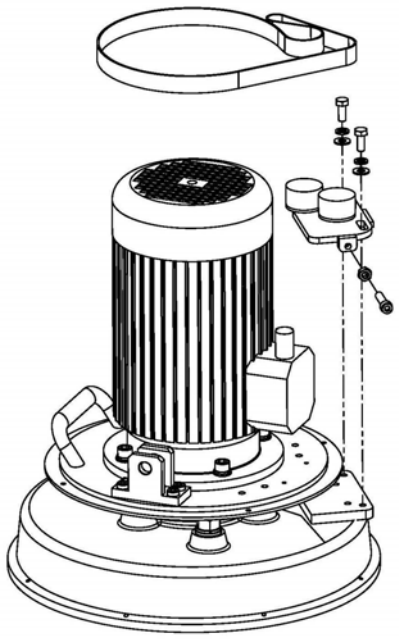

Figure 7.5

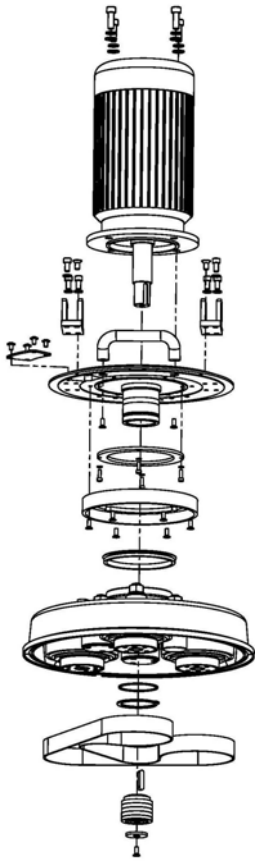

Figure 7.6

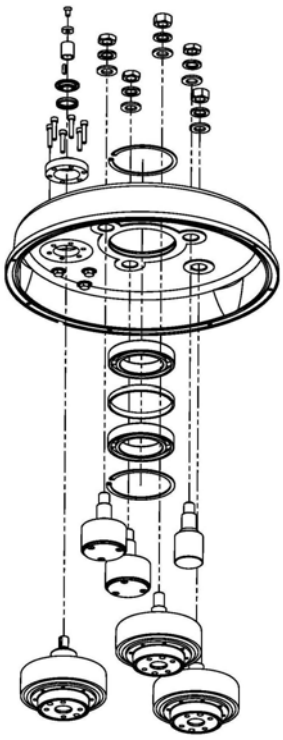

Figure 7.7

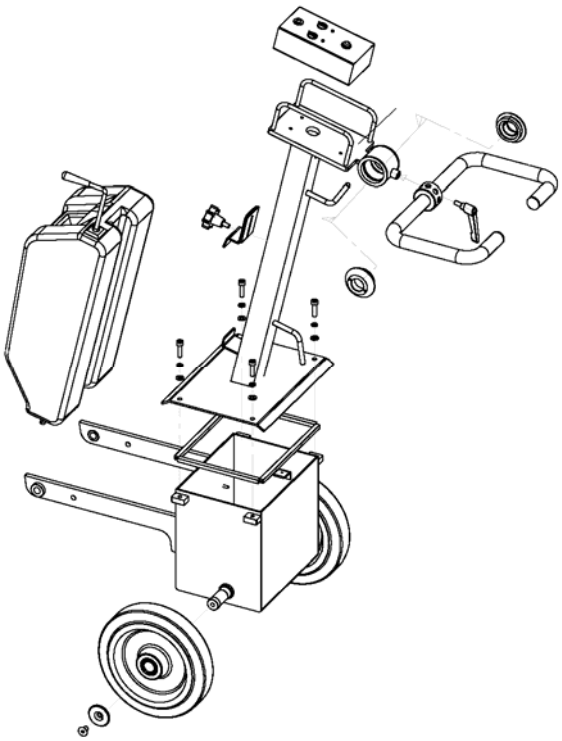

Figure 7.8

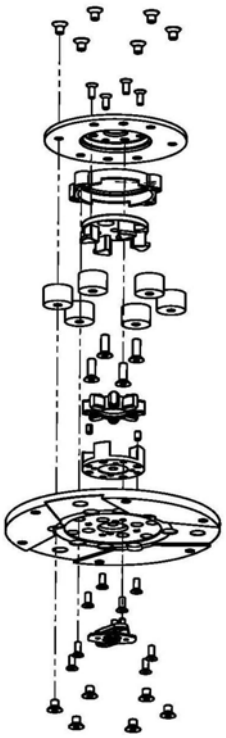

Figure 7.9

# 8. MAINTENANCE AND INSPECTION

**CLEANING**

Keep your machine clean. Cleaning the machine on a regular basis will help detect and solve potential problems before they cause damage to the machine. Most importantly, check and clean the tool plate connections, power cord and plugs, vacuum hoses and water tank.

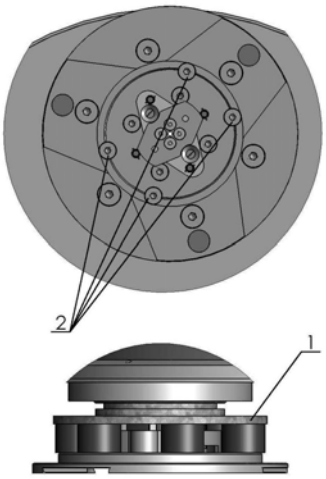

Figure 8.1

**CHECK DAILY**

After operating the Lavina® 16-S-E machine, the operator should conduct a visual inspection of the machine. Any defect should be solved immediately. Pay attention to power cords, plugs and vacuum hoses, loose bolt or screws.

Tool holders: Buffers and spiders are consumables and must be visually checked daily and replaced if needed. See flanges or discs are mounted locked well in place The key lock holders (butterflies) should be also checked.

Check the rubber buffers and fixing of the holders. The flange holding the buffers (Fig.8.1 1)has to be firmly fixed to the unit. A gap seen there means that there are loose screws fixing the holder. The screws has to be tightened immediately for safety operation. Working with loose screws on the holder could also cause bad damages on the machine. Tightening force of the screws has to be 25...30N.m(18...22 ft/lbs).

It is very important to check regularly the screws(Fig.8.1 2),that fix the "Quickchange" holder to the safety part, so that holder will not fly away if the buffers got damaged.

"Quickchange" should be clean. The tension of the planetary belt can be daily checked by moving the main head and feeling the resistance of the moving pulleys, if the belt slips tension immediately, like described in the chapter Troubleshooting**.**

**CHECK EVERY 200 WORKING HOURS**

Every 200 working hours, the operator should inspect all parts of the machine carefully. Most importantly, inspect and clean the tool plate connections, power cord and plugs, vacuum hoses and water tank. Check the guard assembly. Make certain the wheels are clean and rotate properly. Inspect the control buttons. If there are defective control parts, they should be replaced immediately. Replace worn vacuum- and water hoses. Check the tension of the belt and to tighten if necessary. For the correct tension, see TROUBLESHOOTING.

Dismount the tool holders (See Troubleshooting) replace all parts (Spider, buffers, sealer caps, "O" rings) with the slightest damage or consume.

Open the inspection cover on the motor base to check of the planetary driving belt, by moving the main head the belt should not slip on the planetary pulley and drive the pulleys.

**CHECK EVERY 400 WORKING HOURS**

Besides the checks of 200 working hours, replace sealer and V-rings like described in chapter "TROUBLESHOOTING REPLACING BELT AND PULLEY UNITS. Check if belts and bearings are in good condition, change if needed. Beware by tensioning the belt not to "over tension"; the belt will never regain his original tension.

**VACUUM**

As stated previously, frequently check hoses and other parts for clogging.

**WATER LEAKS**

Replace any leaking parts immediately as the water could damage your machine.

**MECHANICAL PARTS**

Parts such as the belts, seal rings, cap rings, spiders and buffers and guard assembly are subject to wear and should be replaced as needed.

**ELECTRICAL SYSTEM**

Dust should not enter the control box as it will destroy the contacts. Remove (blow out) any dust present.

**ONE PHASE CONNECTION**

Please note: the power cable has 3 wires, one ground is yellow/green the other 2 other colors are "hot" wires and should be connected to the phases. (Fig. 8.2)


Figure 8.2

## ELECTRICAL SYSTEM
## LAVINA® 16-S-E ELECTRICAL SCHEMES WITH YASKAWA INVERTER
# 200-240 Volt

### AC 1PH 200-240V 50/60Hz

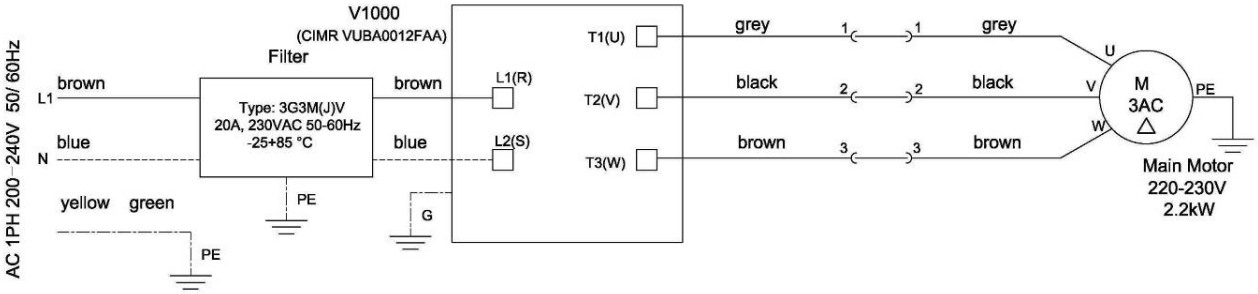


Figure 8.3

The motor is connected in "Delta" (triangle) 230 Volt, reminder for the wire connection of the motor.

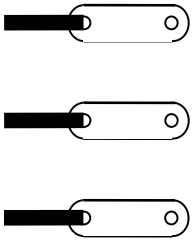

Figure 8.4

### LAVINA® 16-S-E ELECTRICAL SCHEMES YASKAWA CONNECTION MAIN CIRCUIT TERMINALS

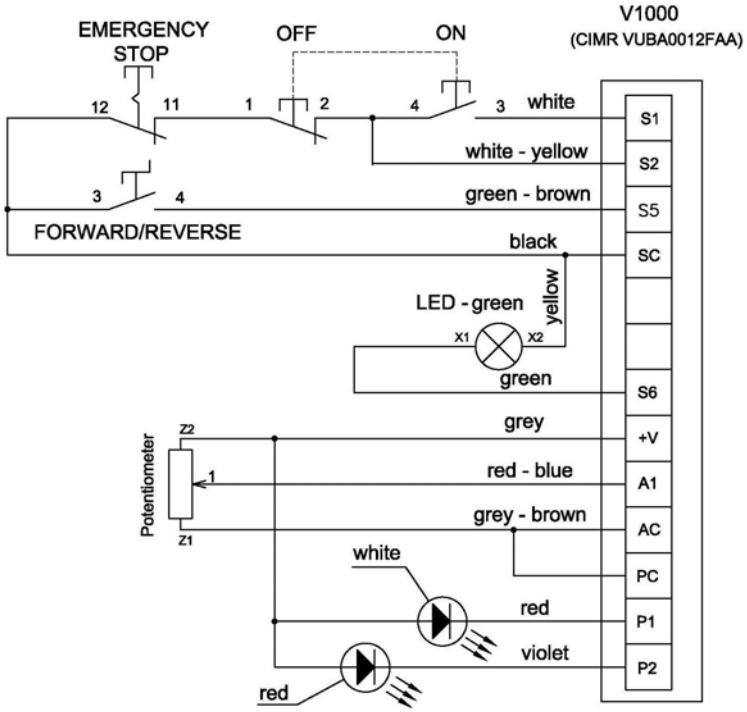


Figure 8.5

# 9. TROUBLESHOOTING
## INDEX OF PROBLEMS AND SOLUTIONS

### 9.1 REPLACING POWER CORD AND PLUGS
When replacing the power cord or plugs always use cords and plugs with specifications as the original ones. Never use lower quality or different type cord and plugs.
In addition, take into consideration is the distance of the appliance from the electrical source. The greater the distance, the greater the resistance and the less current that will be available at the other end, there will be a voltage drop and the inverter will sign alarm mode. This also happen if several machines are working on the same line or when the generator is underrated. In general our standard power cable can be doubled in length, if longer lengths needed you have replace all the cables with cables with bigger gage rated for the length and amperage.

### 9.2 DISMOUNTING AND MOUNTING TOOL HOLDER TO CHANGE BUFFERS AND SPIDERS, CHANGING SEALERS


Figure 9.2.1

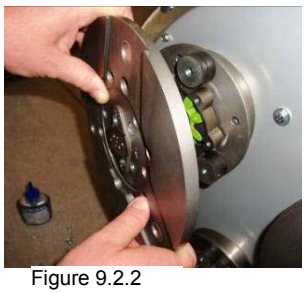
Figure 9.2.2

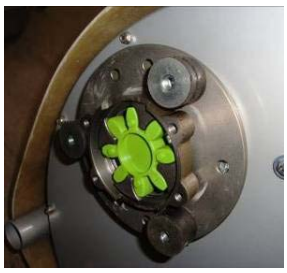
Figure 9.2.3

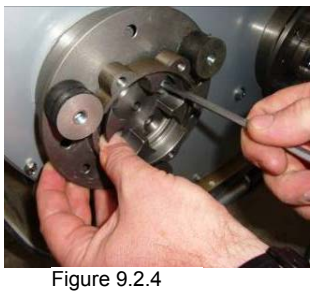
Figure 9.2.4


Figure 9.2.5

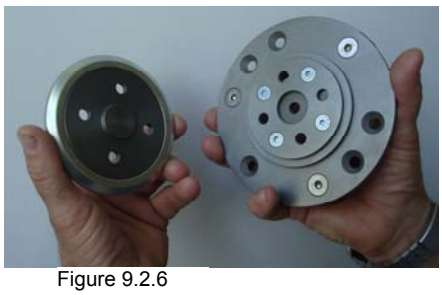
Figure 9.2.6


Figure 9.2.7


Figure 9.2.8

To check or replace the buffers and the spiders, the tool holders have to be dismounted. Remove the countersunk screws on top of the buffer (Fig.9.2.1). Take the disc off (Fig.9.2.2), the spider can be removed or replaced (Fig.9.2.3). By loosing four Hex cap bolts (Fig.9.2.4), the disc comes loose (Fig.9.2.5; Fig.9.2.6) and the buffers can be replaced(Fig.9.2.9). Attention, by mounting use always the "blue" thread locking adhesive, except on the bolts to lock the buffers. Use always original bolts(Fig.9.2.7).
Depending on the number (3 or 6) of buffers, the holder can be more flexible or rigid.


Figure 9.2.9

When the tool holder is dismounted, you can change the sealers(Fig.9.2.8).
Take out Adaptor with sealer and change it.

## 9.3 TENSIONING AND REPLACE THE PLANETARY BELT


Figure 9.3.1


Figure 9.3.2


Figure 9.3.3


Figure 9.3.4


Figure 9.3.5

If the belt slips or is broken separate the carriage from main head, pull out motor plug (Fig. 9.3.1), water-(Fig. 9.3.2) and vacuum tubes. Remove the two pins from the brackets (Fig. 9.3.3). Dismount the top cover (Fig. 9.3.4, Fig. 9.3.4).

## 9.4 TENSIONING USED PLANETARY BELT


Figure 9.4.1


Figure 9.4.2

Noticing speed lost in planetary movement it is possible to tension the belt for planetary movement as described in 9.5 Mounting and tensioning a new planetary belt.

## 9.5 MOUNTING AND TENSIONING A NEW PLANETARY BELT


Figure 9.5.1


Figure 9.5.2

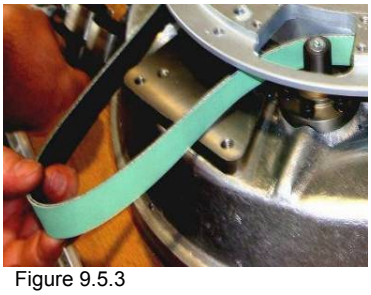
Figure 9.5.3


Figure 9.5.4


Figure 9.5.5


Figure 9.5.6

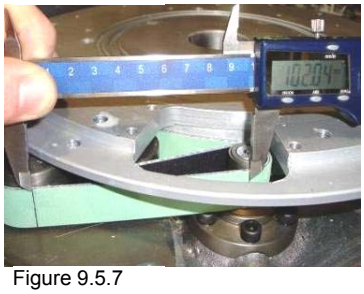
Figure 9.5.7


Figure 9.5.8


Figure 9.5.9

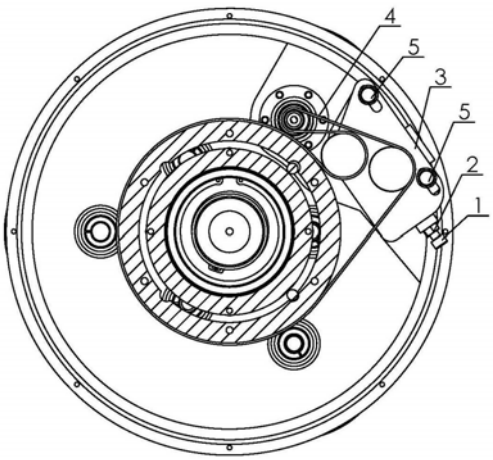


Dismount completely the tensioning device (Fig. 9.5.1). Make 2 signs on the dismounted belt exactly 10 cm out of each other (belt without tension) (Fig. 9.5.2). The purpose is to measure 10.2 cm on the belt in tension what is a tension of 2%., a maximum of 2.5% is allowed.

**ATTENTION: NEVER "OVER" TENSION THE BELT, THE BELT WILL BE DAMAGED AND IT WILL NEVER RECOVER ITS ORIGINAL TENSION**

Mount the belt back around the planetary pulley; see that the belt is behind the driving pulley (Fig. 9.5.3). Put the belt around the left roller of the tensioning device (Fig. 9.5.4). Put the tensioning device back in place and pull the belt from the roller on the right side (Fig. 9.5.5). Put the belt around the driving pulley (Fig. 9.5.6). Begin to tension until the measure of 10 cm between the marks becomes 10.2 cm (Fig. 9.5.7) (Fig. 9.5.8). Tighten the tensioning device while turning the bolt move the planetary head so the belt can slide. (Fig. 9.5.8). Do not forget to lock the tensioning device (Fig.9.5.9).

**9.6 REPLACING BELT AND PULLEY UNITS**

In this section, we explain how to replace the belt and the pulley units. In some instances, the belt can be replaced without replacing the pulley units, although it is always necessary to ensure that the pulley units are working properly.

Disconnect the extension cord from the power line and pull out the hoses.
Pull out the socket from the motor cable to the carriage(Fig. 9.6.1).
Pull the water hose from the tank (Fig. 9.6.2)
Pull the handle out and put the head of the machine in an upright position. Take out the tools (Fig. 9.6.3).


Figure 9.6.1


Figure 9.6.2

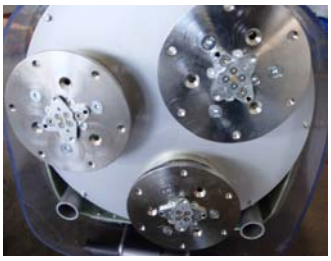
Figure 9.6.3


Figure 9.6.4

Dismount the tool holders as described in the earlier paragraph "mounting and dismounting (Fig. 9.6.4).
Remove the two pins from the brackets (Fig.9.6.5)
Separate the carriage from the main head. Dismount the machine support Dismount the guard assembly. (Fig. 9.6.6)
Unscrew the top cover and remove the top cover by pulling it over the motor. (Fig. 9.6.7)
Mount back the machine support as this will make it easier to turn over the main head. (Fig. 9.6.8)


Figure 9.6.5


Figure 9.6.6


Figure 9.6.7


Figure 9.6.8

### 9.6.1 REPLACEMENT OF THE PULLEY UNITS


Figure 9.6.1.1


Figure 9.6.1.2


Figure 9.6.1.3

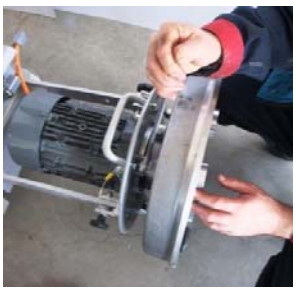
Figure 9.6.1.4


Figure 9.6.1.5

Set the bottom cover assembly aside (Fig.9.6.1.1) Remove the belt by turning the pulleys by hand, while pushing the belt off (Fig.9.6.1.2). Turn the units to ensure that the bearings are working properly. (Fig.9.6.1.3) Units, whose bearings are worn out or do not turn with ease should be replaced.
First, unscrew the nut, which is holding the pulley unit (Fig.9.6.1.4). When released, pull out the whole unit (Fig.9.6.1.5). Carefully pull out the unit with crowbars, but do not use excessive force.

### 9.6.2 MOUNTING THE BELT

Bolt on the belt-replacing tool according to the picture (Fig.9.6.2.1). See the belt-replacing tool is in down position (Fig. 9.6.2.2). Lay the belt with only ½ of its width showing over the pulleys (Fig. 9.6.2.2), and slowly begin to turn the belt replacing tool and the pulleys. Keep turning until the belt is on the pulleys (Fig. 9.6.2.3). Only putting ½ of the belt width is very important otherwise if the belt is initially mounted complete over the pulleys, it will be "over" tensioned and destroyed.


Figure 9.6.2.1


Figure 9.6.2.2


Figure 9.6.2.3

**ATTENTION: NEVER "OVER" TENSION THE BELT, THE BELT WILL BE DAMAGED AND IT WILL NEVER RECOVER ITS ORIGINAL TENSION**
Apply the seal ring in the channel of the aluminum cover and close the machine.
Reassemble in the same manner.
Your Lavina® 16-S-E is now ready for use!

### 9.7 MOTOR CONNECTION
In case of changing the motor, please check the cable connection to your motor.
Lavina®16-S-E
The motor is connected in "Delta"
(Triangle) 230 Volt, reminder for
the wire connection of the motor.

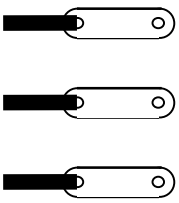
Figure 9.7

## 9.8 FAULT DIAGNOSIS INVERTER YASKAWA V1000

Pages are referring to
Yaskawa Electric SIEP C710606 18A YASKAWA AC Drive – V1000 Technical Manual

### ◆ Types of Alarms, Faults, and Errors

Check the LED operator for information about possible faults if the drive or motor fails to operate. *Refer to Using the Digital LED Operator on page 70*.

If problems occur that are not covered in this manual, contact the nearest Yaskawa representative with the following information:

- Drive model
- Software version
- Date of purchase
- Description of the problem

*Table 6.4* contains descriptions of the various types of alarms, faults, and errors that may occur while operating the drive.

Contact Yaskawa in the event of drive failure.

**Table 6.4 Types of Alarms, Faults, and Errors**

| Type | Drive Responses to Alarms, Faults, and Errors |
|---|---|
| **Faults** | When the drive detects a fault:<br>• The digital operator displays text that indicates the specific fault and the ALM indicator LED remains lit until the fault is reset.<br>• The fault interrupts drive output and the motor coasts to a stop.<br>• Depending on the setting, the drive and motor may stop via different methods than listed.<br>• If a digital output is programmed for fault output (H2-□□ = E), it will close if a fault occurs.<br>• When the drive detects a fault, it will remain inoperable until that fault has been reset. *Refer to Fault Reset Methods on page 264*. |
| **Minor Faults and Alarms** | When the drive detects an alarm or a minor fault:<br>• The digital operator displays text that indicates the specific alarm or minor fault and the ALM indicator LED flashes.<br>• The motor does not stop.<br>• One of the multi-function contact outputs closes if set to be tripped by a minor fault (H2-□□ = 10), but not by an alarm.<br>• The digital operator displays text indicating a specific alarm and ALM indicator LED flashes.<br>• Remove the cause of an alarm or minor fault to automatically reset. |
| **Operation Errors** | When parameter settings conflict with one another or do not match hardware settings (such as with an option card), it results in an operation error.<br>When the drive detects an operation error:<br>• The digital operator displays text that indicates the specific error.<br>• Multi-function contact outputs do not operate.<br>• When the drive detects an operation error, it will not operate the motor until the error has been reset. Correct the settings that caused the operation error to reset. |
| **Tuning Errors** | Tuning errors occur while performing Auto-Tuning.<br>When the drive detects a tuning error:<br>• The digital operator displays text indicating the specific error.<br>• Multi-function contact outputs do not operate.<br>• Motor coasts to stop.<br>• Remove the cause of the error and repeat the Auto-Tuning process. |

### ◆ Alarm and Error Displays

#### ■ Faults

When the drive detects a fault, the ALM indicator LEDs remain lit without flashing. If the LEDs flash, the drive has detected a minor fault or alarm. *Refer to Minor Faults and Alarms on page 240* for more information. An overvoltage situation trips both faults and minor faults, therefore it is important to note whether the LEDs remain lit or if the LEDs flash.

| LED Operator Display | | Name | Page |
|---|---|---|---|
| bUS | bUS | Option Communication Error | 242 |
| CE | CE | MEMOBUS/Modbus Communication Error | 242 |
| CF | CF | Control Fault | 242 |
| CoF | CoF | Current Offset Fault | 242 |
| CPF02 | CPF02 | A/D Conversion Error | 242 |
| CPF03 | CPF03 | PWM Data Fault | 243 |
| CPF06 | CPF06 | Drive specification mismatch during Terminal Board or Control Board replacement | 243 |
| CPF07 | CPF07 | Terminal Board Communication Fault | 243 |

| LED Operator Display | | Name | Page |
|---|---|---|---|
| CPF08 | CPF08 | EEPROM Serial Communications Fault | 243 |
| CPF11 | CPF11 | RAM Fault | 243 |
| CPF12 | CPF12 | FLASH Memory Fault | 243 |
| CPF13 | CPF13 | Watchdog Circuit Exception | 243 |
| CPF14 | CPF14 | Control Circuit Fault | 243 |
| CPF16 | CPF16 | Clock Fault | 243 |
| CPF17 | CPF17 | Timing Fault | 243 |
| CPF18 | CPF18 | Control Circuit Fault | 243 |
| CPF19 | CPF19 | Control Circuit Fault | 244 |

| LED Operator Display | | Name | Page |
|---|---|---|---|
| CPF20 or CPF21 | CPF20or CPF21 | RAM Fault | 244 |
| | | FLASH Memory Fault | 244 |
| | | Watchdog Circuit Exception | 244 |
| | | Clock Fault | 244 |
| oH3 | oH3 | Motor Overheat 1 (PTC input) | 247 |
| oH4 | oH4 | Motor Overheat 2 (PTC input) | 248 |
| oL1 | oL1 | Motor Overload | 248 |
| oL2 | oL2 | Drive Overload | 248 |
| oL3 | oL3 | Overtorque Detection 1 | 249 |
| oL4 | oL4 | Overtorque Detection 2 | 249 |
| oL5 | oL5 | Mechanical Weakening Detection 1 | 249 |
| oL7 | oL7 | High Slip Braking oL | 249 |
| oPr | oPr | Operator Connection Fault | 249 |
| CPF22 | CPF22 | A/D Conversion Error | 244 |
| CPF23 | CPF23 | PWM Feedback Data Fault | 244 |
| CPF24 | CPF24 | Drive Capacity Signal Fault | 244 |
| dEv | dEv | Excessive Speed Deviation (for Simple V/f with PG) | 244 |
| EF0 | EF0 | Option Card External Fault | 244 |
| EF1 to EF7 | EF1 to EF7 | External Fault (input terminal S1 to S7) | 244 |
| FbH | FbH | Excessive PID Feedback | 245 |
| FbL | FbL | PID Feedback Loss | 245 |

| LED Operator Display | | Name | Page |
|---|---|---|---|
| GF | GF | Ground Fault | 245 |
| LF | LF | Output Phase Loss | 245 |
| LF2 | LF2 | Output Open Phase | 246 |
| oC | oC | Overcurrent | 246 |
| oFA00 | oFA00 | Option Card Fault (port A) | 246 |
| oH | oH | Heatsink Overheat | 247 |
| oH1 | oH1 | Heatsink Overheat | 247 |
| PGo | PGo | PG Disconnect (for Simple V/f with PG) | 250 |
| rH | rH | Dynamic Braking Resistor | 251 |
| rr | rr | Dynamic Braking Transistor | 251 |
| SEr | SEr | Too Many Speed Search Restarts | 251 |
| STO | STO | Pull-Out Detection | 251 |
| UL3 | UL3 | Undertorque Detection 1 | 251 |
| UL4 | UL4 | Undertorque Detection 2 | 251 |
| UL5 | UL5 | Mechanical Weakening Detection 2 | 251 |
| Uv1 | Uv1 | Undervoltage | 252 |
| Uv2 | Uv2 | Control Power Supply Undervoltage | 252 |
| Uv3 | Uv3 | Soft Charge Circuit Fault | 252 |
| oS | oS | Overspeed (for Simple V/f with PG) | 249 |
| ov | ov | Overvoltage | 249 |
| PF | PF | Input Phase Loss | 250 |

**Note:** If faults CPF11 through CPF19 occur, the LED operator will display CPF00 or CPF11.

## ■ Minor Faults and Alarms

When a minor fault or alarm occurs, the ALM LED flashes and the text display shows an alarm code. A fault has occurred if the text remains lit and does not flash. *Refer to Alarm Detection on page 253*. An overvoltage situation, for example, can trigger both faults and minor faults. It is therefore important to note whether the LEDs remain lit or if the LEDs flash.

**Table 6.5 Minor Fault and Alarm Displays**

| LED Operator Display | | Name | Minor Fault Output (H2-□□ = 10) | Page |
|---|---|---|---|---|
| bb | bb | Drive Baseblock | No output | 253 |
| bUS | bUS | Option Card Communications Error | YES | 253 |
| CALL | CALL | Serial Communication Transmission Error | YES | 253 |
| CE | CE | MEMOBUS/Modbus Communication Error | YES | 253 |
| CrSt | CrSt | Can Not Reset | YES | 253 |
| dEv | dEv | Excessive Speed Deviation (for Simple V/f with PG) | YES | 254 |
| dnE | dnE | Drive Disabled | YES | 254 |
| EF | EF | Run Command Input Error | YES | 254 |
| EF0 | EF0 | Option Card External Fault | YES | 254 |
| EF1 to EF7 | EF1 to EF7 | External Fault (input terminal S1 to S7) | YES | 255 |
| FbH | FbH | Excessive PID Feedback | YES | 255 |
| FbL | FbL | PID Feedback Loss | YES | 255 |
| Hbb | Hbb | Safe Disable Signal Input | YES | 255 |
| HbbF | HbbF | Safe Disable Signal Input | YES | 255 |
| SE | SE | MEMOBUS/Modbus Test Mode Fault | YES | — |
| oL5 | oL5 | Mechanical Weakening Detection 1 | YES | 249 |
| UL5 | UL5 | Mechanical Weakening Detection 2 | YES | 251 |
| dWAL | dWAL | DriveWorksEZ Alarm | YES | 244 |
| HCA | HCA | Current Alarm | YES | 256 |
| oH | oH | Heatsink Overheat | YES | 256 |
| oH2 | oH2 | Drive Overheat | YES | 256 |
| oH3 | oH3 | Motor Overheat | YES | 256 |
| oL3 | oL3 | Overtorque 1 | YES | 256 |
| oL4 | oL4 | Overtorque 2 | YES | 257 |
| oS | oS | Overspeed (for Simple V/f with PG) | YES | 257 |

| LED Operator Display | | Name | Minor Fault Output (H2-□□ = 10) | Page |
|---|---|---|---|---|
| ou | ov | Overvoltage | YES | 257 |
| PASS | PASS | MEMOBUS/Modbus Test Mode Complete | No output | 257 |
| PGo | PGo | PG Disconnect (for Simple V/f with PG) | YES | 257 |
| rUn | rUn | During Run 2, Motor Switch Command Input | YES | 258 |
| rUnC | rUnC | Run Command Reset | YES | 258 |
| UL3 | UL3 | Undertorque 1 | YES | 258 |
| UL4 | UL4 | Undertorque 2 | YES | 258 |
| Uv | Uv | Undervoltage | YES | 258 |

## ■ Operation Errors

**Table 6.6 Operation Error Displays**

| LED Operator Display | | Name | Page |
|---|---|---|---|
| oPE01 | oPE01 | Drive Unit Setting Error | 259 |
| oPE02 | oPE02 | Parameter Setting Range Error | 259 |
| oPE03 | oPE03 | Multi-Function Input Setting Error | 259 |
| oPE04 | oPE04 | Terminal Board Mismatch Error | 260 |
| oPE05 | oPE05 | Run Command Selection Error | 260 |
| oPE07 | oPE07 | Multi-Function Analog Input Selection Error | 260 |

| LED Operator Display | | Name | Page |
|---|---|---|---|
| oPE08 | oPE08 | Parameter Selection Error | 260 |
| oPE09 | oPE09 | PID Control Selection Error | 260 |
| oPE10 | oPE10 | V/f Data Setting Error | 261 |
| oPE11 | oPE11 | Carrier Frequency Setting Error | 261 |
| oPE13 | oPE13 | Pulse Train Monitor Selection Error | 261 |

# 10. WARRANTY AND RETURNS

**Warranty Policy for Lavina® 16-S-E**

Superabrasive Ltd. guarantees that the original purchaser of the Lavina® S-E machine will be covered against defects in material and workmanship for a period of 2 years from the date of delivery or 500 hours of use whichever comes first.

The following conditions pertain to this warranty:

- Applies only to the original owner and it is not transferable.
- Machine must not be dismantled and tampered with in any way.
- Covered components proven defective will be repaired or replaced at no charge. Covered components include motors, bearings and switches.
- This warranty does not apply to any repair arising from misuse, neglect or abuse, or to repair of proprietary parts.
- This warranty does not apply to products with aftermarket alterations, changes, or modifications.
- This warranty is in lieu of and excludes every condition of warranty not herein expressly set out and all liability for any form of consequential loss or damage is hereby expressly excluded.
- This warranty is limited to repair or replacement of covered components and reasonable labor expenses.
- All warranty returns must be shipped freight prepaid.

The above warranty conditions may be changed only by Superabrasive. Superabrasive reserves the right to inspect and make a final decision on any machine returned under this warranty. This warranty applies to new, used and demo machines.

Superabrasive does not authorize any person or representative to make any other warranty or to assume for us any liability in connection with the sale and operation of our products

**RETURN POLICY FOR LAVINA® S-E MACHINES**

The Lavina® S-E machines may be returned, subject to the following terms:

In no case, a machine is to be returned to Superabrasive Ltd. for credit or repair without prior authorization. Please contact Superabrasive Ltd. or your local distributor for an authorization and issuance of a return authorization number. This number along with the serial number of the machine must be included on all packages and correspondence. Machines returned without prior authorization will remain property of the sender and Superabrasive Ltd. will not be responsible for these.

# 11. DISPOSAL

If your machine after time is not usable or needs to be replaced, send the machine back to Superabrasive or a local distributor, where a professional dismantle complying with the environment laws and directives is guaranteed.

# 12. MANUFACTURER'S CONTACTS

If you need to contact Superabrasive Ltd. with technical support questions, below is the contact information.


| | | | |
|---|---|---|---|
| Address: | Superabrasive Ltd.<br>Rabotnicheska 2A<br>BG-6140 Krun<br>Bulgaria | Email:<br>Tel.:<br>Fax:<br>Website: | factory@superabrasive.com<br>+359 431 6 44 77<br>+359 431 6 44 66<br>www.superabrasive.com |

# 13. SPARE PARTS

## ASSEMBLY AND PARTS SPECIFICATIONS

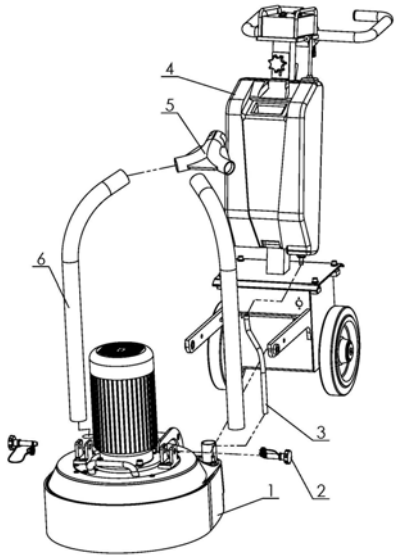


| 1. LAVINA® 16-S-E GENERAL PARTS | | | |
|---|---|---|---|
| № | Item Number | Description | Qty. |
| 1 | L16S-10.00.00 | Main Head | 1 |
| 2 | L25SPS-07.03.00.00 | Pin Assembly | 2 |
| 3 | D9L740 | Water Hose | 1 |
| 4 | L16SE-20.00.00 | Carriage With Control Box | 1 |
| 5 | L16P-00.00.00.01 | Three-Way Air Duct | 1 |
| 6 | D40L950 | Vacuum Hose | 2 |

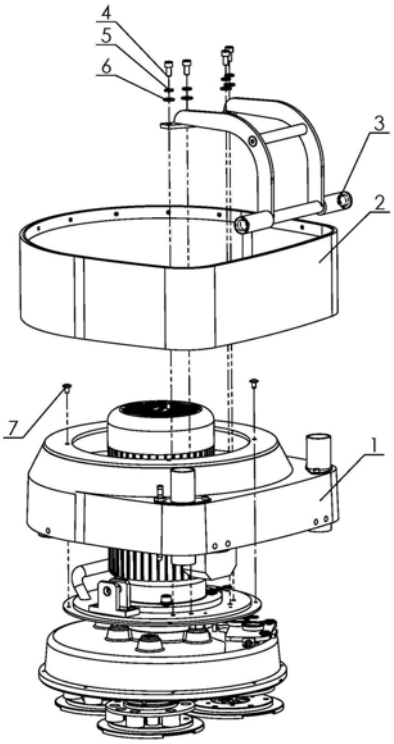


| 2. LAVINA® 16-S-E MAIN HEAD PARTS | | | |
|---|---|---|---|
| № | Item Number | Description | Qty. |
| 1 | L16S-19.00.00 | Top Cover Assembly | 1 |
| 2 | L16S-04.00.00 | Guard Assembly | 1 |
| 3 | L16-02.00.00.00 | Machine Support | 1 |
| 4 | M8x20DIN912 | Screw | 4 |
| 5 | M8DIN7980 | Spring Washer | 4 |
| 6 | M8DIN125A | Washer | 4 |
| 7 | M6X10ISO7380F | Screw | 4 |

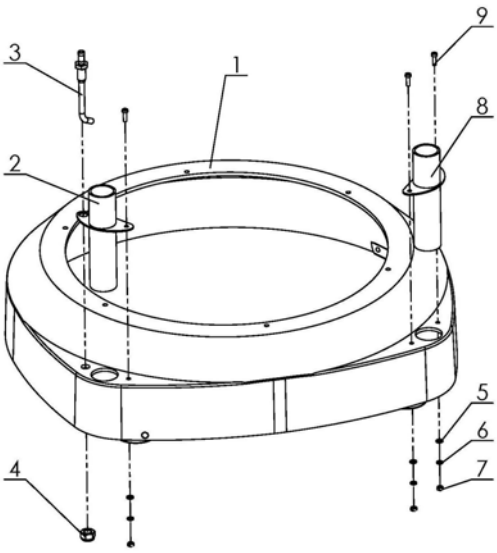


| 3. LAVINA® 16-S-E TOP COVER PARTS | | | |
|---|---|---|---|
| № | Item Number | Description | Qty. |
| 1 | L16S-19.00.01 | Top Cover | 1 |
| 2 | L25GS-19.10.00 | Vacuum Port | 1 |
| 3 | L25GS-19.20.00 | Water Fitting | 1 |
| 4 | M12DIN985 | Nut | 1 |
| 5 | M5DIN125A | Washer | 3 |
| 6 | M5DIN127B | Spring Washer | 3 |
| 7 | M5DIN934 | Nut | 3 |
| 8 | L25SPS-04.01.00.00 | Vacuum Port | 1 |
| 9 | M5X16DIN84A | Screw | 3 |

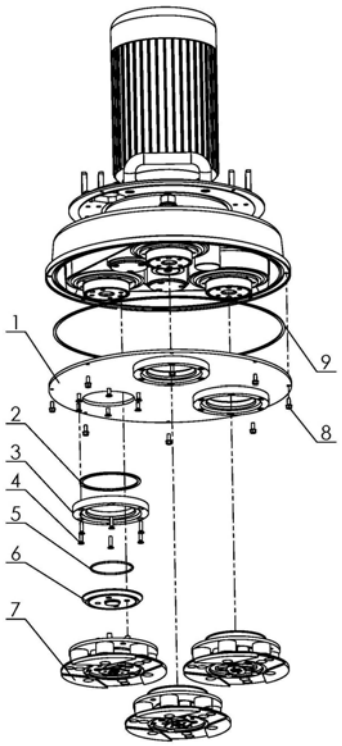


| 4. LAVINA® 16-S-E BOTTOM COVER PARTS 1 | | | |
|---|---|---|---|
| № | Item Number | Description | Qty. |
| 1 | L16P-01.04.00.00 | Bottom Cover Assembly | 1 |
| 2 | D3x2x310 | Seal | 3 |
| 3 | L25P-01.05.00.02 | Flange | 3 |
| 4 | M5x20 DIN 7991 | Screw | 18 |
| 5 | OR68X2.5 | O-Ring | 3 |
| 6 | A16.00.00 | Adaptor | 3 |
| 7 | A39.00.00 | Tool Holder A39 | 3 |
| 8 | M5X12DIN6921 | Screw | 8 |
| 9 | D4X2X395 | Seal | 1 |

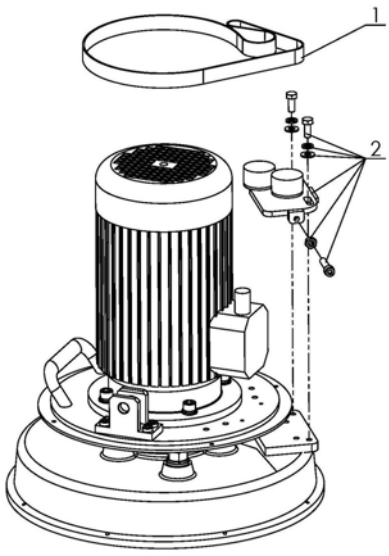


| 5. LAVINA® 16-S-E PLANETARY DRIVE PARTS | | | |
|---|---|---|---|
| № | Item Number | Description | Qty. |
| 1 | TC-20EF960X20X2 | Endless Transmission Flat Belt | 1 |
| 2 | L16S-17.00.00 | Planetary Tensioning Unit | 1 |

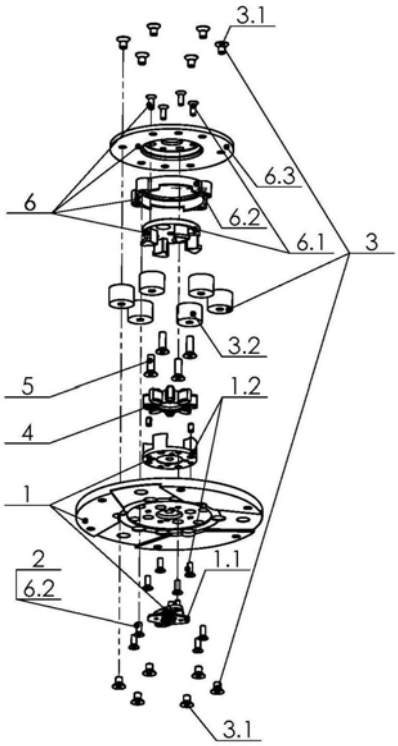


| 6. LAVINA® 16-S-E TOOL HOLDER PARTS | | | |
|---|---|---|---|
| № | Item Number | Description | Qty. |
| 1 | A39.10.00 | Quick Change Assembly | 1 |
| 1.1 | A31.12.00 | Keylock Set | 1 |
| 1.2 | A31.10.02-K | Copling 2 with screws | 1 |
| 2 | M6X16DIN7991 | Screw | 4 |
| 3 | A25.00.10-K | Buffer with two screw | 6 |
| 3.1 | M8X12DIN7991 | Screw | 12 |
| 3.2 | A25.00.10 | Buffer | 6 |
| 4 | A25.00.05-02 | Spider | 1 |
| 5 | M8X25DIN7991-10.9 | Screw | 4 |
| 6 | A31.20.00 | Flange | 1 |
| 6.1 | A31.20.03-K | Copling 1 with screws | 1 |
| 6.2 | A31.20.02-K | Security ring | 1 |
| 6.3 | A31.20.01 | Flange A31 | 1 |

| 7. LAVINA® 16-S-E BOTTOM COVER PARTS 2 | | | |
|---|---|---|---|
| № | Item Number | Description | Qty. |
| 1 | M10x30DIN912 | Screw | 4 |
| 2 | M10DIN127B | Spring Washer | 4 |
| 3 | M10DIN125A | Washer | 4 |
| 4 | S161 | Electro Motor | 1 |
| 5 | M8x20DIN7991 | Screw | 2 |
| 6 | M8x16DIN912 | Screw | 6 |
| 7 | M8DIN7980 | Spring Washer | 6 |
| 8 | L25SPS-07.00.00.02-L | Left Fork | 1 |
| 9 | GN565.2-128-BL | Handle | 1 |
| 10 | L16S-15.01.00 | Base Plate | 1 |
| 11 | L25P-01.03.00.09 | Flange | 1 |
| 12 | M5DIN7980 | Spring Washer | 4 |
| 13 | M5x16DIN912 | Screw | 4 |
| 14 | L16S-15.00.05 | Planetary Pulley | 1 |
| 15 | TWVA120 | V-Ring | 1 |
| 16 | TC-20EF1640X30X2.5 | Flat Belt | 1 |
| 17 | DIN6885A8X7X36 | Key | 1 |
| 18 | L430-00.00.00.01 | Central Pulley | 1 |
| 19 | L25SPS-00.00.00.15 | Front Washer | 1 |
| 20 | M6x16DIN7991 | Screw | 9 |
| 21 | B65DIN471 | Retaining Ring | 1 |
| 22 | L25SPS-00.00.00.23 | Compensating Ring | 1 |
| 23 | L16S-15.00.06 | Inspection Cover | 1 |
| 24 | M6x10ISO7380F | Screw | 4 |
| 25 | L25SPS-07.00.00.02-R | Right Fork | 1 |

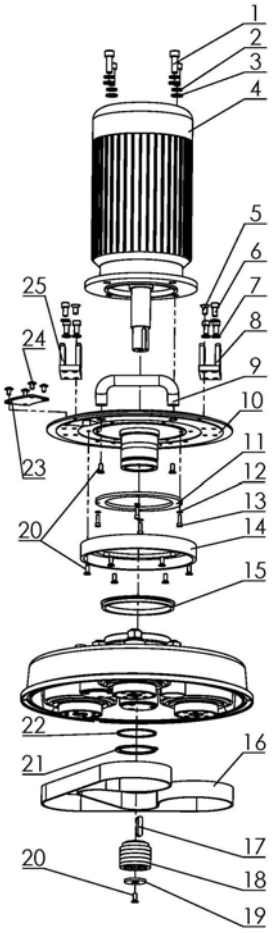


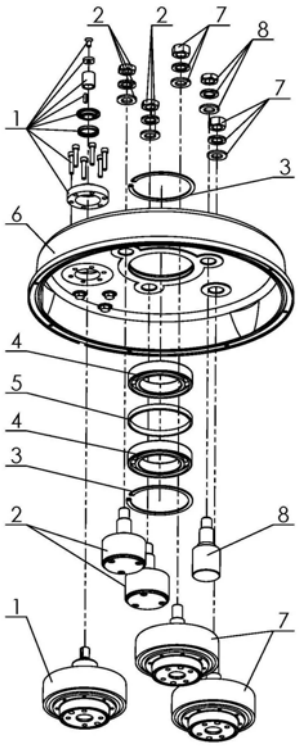


| 8. LAVINA® 16-S-E PULLEY UNIT PARTS | | | |
|---|---|---|---|
| № | Item Number | Description | Qty. |
| 1 | L16S-16.00.00 | Driving Pulley Unit | 1 |
| 2 | L16P-01.01.00.00 | Roller Unit Assembly | 2 |
| 3 | A10013943 | Retaining Ring | 2 |
| 4 | 6013 | Roller Assembly | 2 |
| 5 | L25SPS-00.00.00.34 | Distance Ring | 1 |
| 6 | L16S-10.00.08 | Disc | 1 |
| 7 | L16P-01.02.00.00-01 | Pulley Unit Assembly | 2 |
| 8 | L16SPS-00.00.00.03 | Balancing Roller Ass. | 1 |

| 9. LAVINA® 16-S-E CARRIAGE PARTS 2 | | | |
|---|---|---|---|
| № | Item Number | Description | Qty. |
| 1 | L16-01.07.01.00 | Control Box with buttons | 1 |
| 2 | L16P-02.04.00.00 | Upper Frame | 1 |
| 3 | L25SPS-02.00.00.18-01 | Nut | 2 |
| 4 | L16-01.05.00.00 | Handle Assembly | 1 |
| 5 | A58194 | Swivel Bolt For Handle | 1 |
| 6 | M8x30 DIN 912 | Screw | 4 |
| 7 | M8DIN127B | Spring Washer | 4 |
| 8 | M8DIN125A | Washer | 4 |
| 9 | P880 | Seal | 1 |
| 10 | L16S-21.00.00 | Lower Frame | 1 |
| 11 | POEV250/25KSG | Wheel | 2 |
| 12 | L16-01.00.00.01 | Cap | 2 |
| 13 | M10x16DIN7991 | Screw | 2 |
| 14 | LT12 | Tank | 1 |
| 15 | T34391 | Knob Bolt | 1 |
| 16 | L12-C | Upper Bracket | 1 |

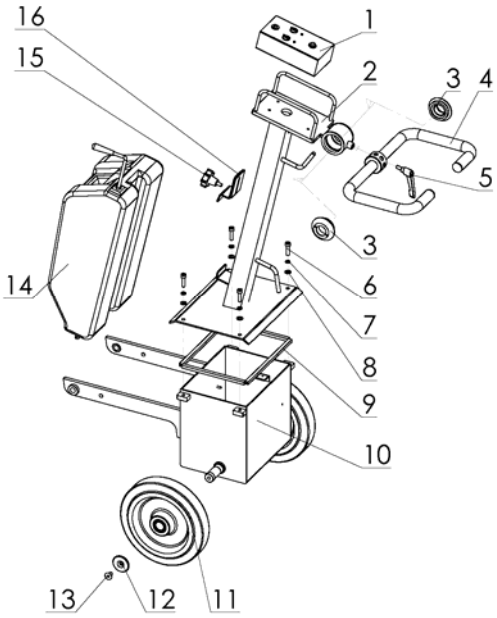


## CONTROL BOX 208-240 VOLT

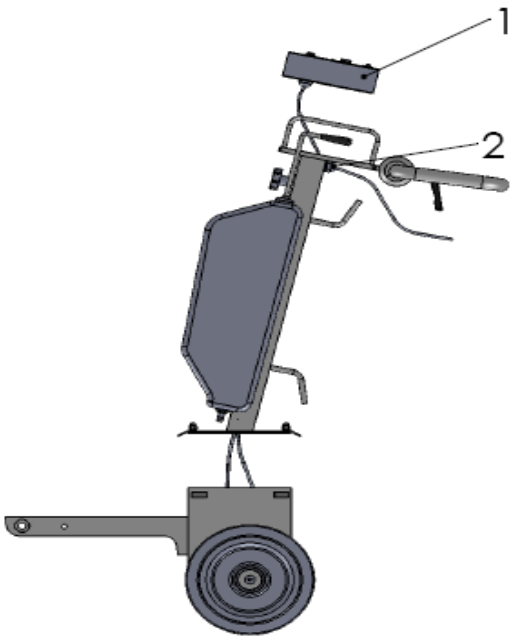


| 10. LAVINA® 16-S-E CONTROL BOX 1 PARTS | | | |
|---|---|---|---|
| № | Item Number | Description | Qty. |
| 1 | L16-01.07.01.00 | Control Box with buttons | 1 |
| 2 | PGF | Fitting with Cable | 1 |

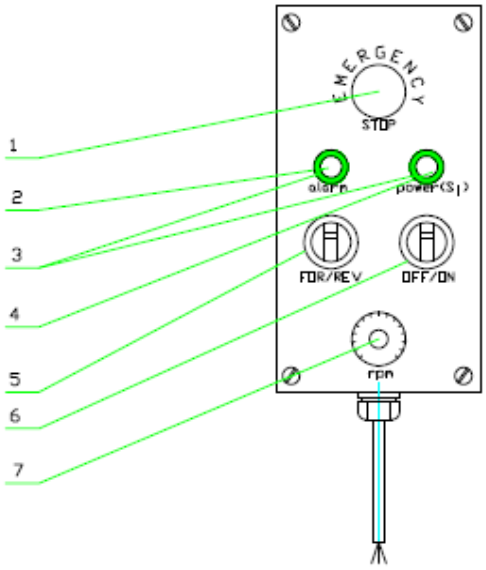


| 11. LAVINA® 16-S-E CONTROL WITH BUTTONS PARTS | | | |
|---|---|---|---|
| № | Item Number | Description | Qty. |
| 1 | 20NS-30.10.10 | Emergency Stop | 1 |
| 2 | 16S-30.10.13 | Alarm Led | 1 |
| 3 | F5 | Led Holder | 2 |
| 4 | 16S-30.10.14 | Power Loss Led | 1 |
| 5 | 16S-30.10.11 | Switch button (two positions) | 1 |
| 6 | 16S-30.10.12 | Switch button (three positions) | 1 |
| 7 | 16S-30.10.04 | Potentiometer | 1 |

## ELECTRICAL BOX 208-240 VOLT

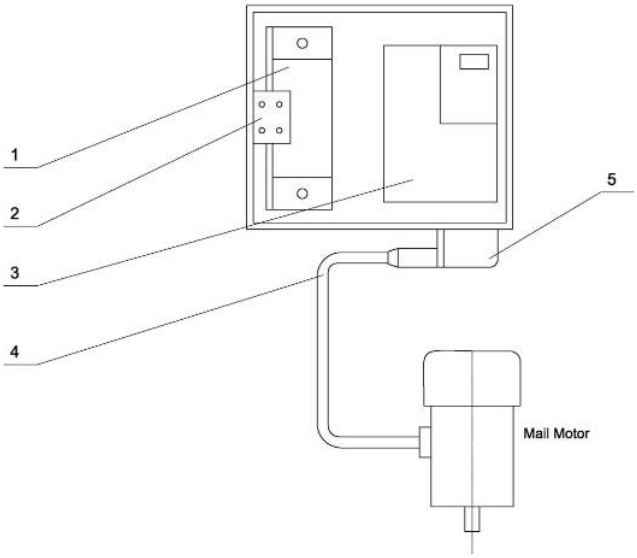


| 12. LAVINA® 16-S-E ELECTRICAL BOX PARTS | | | |
|---|---|---|---|
| № | Item Number | Description | Qty. |
| 1 | 16SE-30.11.01 | Filter | 1 |
| 2 | 2x6 | Clamp | 1 |
| 3 | 16S-30.11.01 | Inverter | 1 |
| 4 | 16S-30.12.00 | Cable with Plug | 1 |
| 5 | 16S-30.13.00 | Cable with Outlet | 1 |

**To order any parts, customer has to provide the machine model and serial number. Without this information, customer is responsible for ordering the correct part, and no shipping charges will be refunded if the part ordered is wrong.**