LAVINA®

LAVINA® 25-S-E User Manual

SUPERABRASIVE

www.superabrasive.com / factory@superabrasive.com

CE

1. GENERAL INFORMATION

Preface 3
Manufacturer 3
General Description 3
Machine Characteristics 3
Main Design 3
Environmental Conditions 3
Electrical Connection 3
Vacuum Connection 4
Technical Data 4
Vibrations 4
Sonorous Emissions 4
Label Data 4
Customer Service 4

2. SAFETY INSTRUCTIONS

Recommended Use 4
Prohibited Use 4
Preparation for Work 5
Protection Devices 5
Arrest Functions 5
Safe Use 5
Residual Risks 5
Before You Begin 5
Operating Machine 5
After Work is Completed 5
The Work Area 5
Personal Protective Equipment (Ppe) 5
Operator 5

3. HANDLING AND TRANSPORTATION

Preparing the Machine for Transportation 6
Lift the Machine from Working to Tool Mounting Position 6
Lifting 6
Adjusting the Handle 6
Storage 6

4. OPERATION

Preliminary Controls 7
Water Flow Control Unit 7
Adjusting and Mounting Tools 7
Frame Blocking (U-Joint) 7
Control Board 8
Starting the Machine 8
Operating the Machine 8
Stopping Machine 8
Alarm 8

5. TOOLS AND ACCESSORIES

Weights 9
Tool Holder Key 9
Foam Plate 9
Security Plate for Quickchange Pads 9

6. POPULAR TOOLS

10

7. EXPLODED VIEW

General Exploded View (Fig.7.1) 11
Top Cover Exploded View 1 (Fig.7.2) 11
Planetary Drive Exploded View (Fig.7.3) 11
Top Cover Exploded View 2 (Fig.7.4) 11
Bottom Cover Exploded View 1 (Fig.7.5) 12
Bottom Cover Exploded View 2 (Fig.7.6) 12
Pulley Units Exploded View (Fig.7.7) 12
Carriage Exploded View (Fig.7.8) 12
Tool Holder Exploded View (Fig.7.9) 12

8. MAINTENANCE AND INSPECTION

Cleaning 13
Check Daily 13
Check and replace after the first 15 Working Hours 13
Check Every 200 Working Hours 13
Check Every 400 Working Hours 13
Vacuum 13
Water Leaks 13
Mechanical Parts 13
Electrical System 13
Electrical Schemes 380 Volt 14

9. TROUBLESHOOTING

Index of Problems and Solutions
9.1 Replacing Power Cord and Plugs 15
9.2 Dismounting and Mounting Tool Holder to change buffers and spiders, changing V-Rings and Felt-Rings 15
9.3 Tensioning and Replace the Planetary Belt 16
9.4 Tensioning Used Planetary Belt 16
9.5 Mounting and Tensioning a new Planetary Belt 16
9.6 Checking the Tension of the Belt 17
9.7 Replacing of the Pulley Units 18
9.8 Mounting the Belt 19
9.9 Motor Connection 19
9.9 Fault Diagnosis Inverter YASKAWA V1000 20

10. WARRANTY AND RETURNS

Warranty 23
Return Policy 23

11. DISPOSAL

Disposal 23

12. MANUFACTURER'S CONTACTS

Manufacturer's contract 23

13. SPARE PARTS

13.1 General Parts/for machines produced before Jan.1 2014/ 24
13.1 General Parts/for machines produced after Jan.1 2014/ 24
13.2 Top Cover Parts 1/for machines produced before Jan.1 2014/25
13.2 Top Cover Parts 1/for machines produced after Jan.1 2014/ 25
13.3 Top Cover Parts 2 26
13.4 Planetary Drive Parts 26
13.5 Guard Parts 26
13.6 Bottom Cover Parts 1 27
13.7 Bottom Cover Parts 2 27
13.8 Pulley Units Parts 28
13.8a. Pulley Unit Assembly 28
13.8b. Driving Pulley Unit 28
13.9 Water Supply Parts/for machines produced before Jan.1 2014/ 28
13.9 Water Tank Parts /for machines produced after Jan.1 2014/ 28
13. 10 Tool Holder Parts 29
13.11 Carriage Parts/for machines produced before Jan.1 2014/ 29
13.11 Carriage Parts/for machines produced after Jan.1 2014/ 30
13.13 Control Box Parts 380 Volt 31

1. GENERAL INFORMATION

This owner's manual is intended for the operator of the Lavina® S-E machine, the servicing technician as well as for anyone involved with operating or servicing the machine. We recommend that you read the instructions very carefully and follow them strictly.The manual includes information about assembling, using, handling, adjusting and maintaining your Lavina® S-E floor grinding andpolishing machine.

MANUFACTURER

Superabrasive was founded in 1987, as a manufacturer of high quality diamond tools for the stone and concrete industry. Today, Superabrasive is one of the world's leading companies in the production of diamond tools and floor grinding machinery. At Superabrasive, we strive to deliver the very best solutions to our customers, and enable them to work more efficiently.

GENERAL DESCRIPTION

The Lavina® S-E machine is intended for grinding, polishing and buffing concrete, marble, granite, limestone, and terrazzo surfaces with diamond tools.
The Lavina® S-E machine is a three-disc machine, which can be used dry as well as wet.
For best results, use only tools manufactured or recommended by Superabrasive and its distributors. Additionally, the machine could be used for grinding wood floor surfaces.
⚠ WARNING The Lavina® S-E machine is manufactured and fitted for the above-mentioned applications only! Every other use may possess risks to the persons involved.

MACHINE CHARACTERISTICS

The Lavina® S-Emachine is made of two main component sections:

MAIN DESIGN

The two main component sections, are the carriage and main head.
The **handle** (Fig.1.2) on the frame is adjustable in height and allows the operator to work in a correct and safe working posture.
The **halogen spotlight** (Fig.1.2) enables the operator to work in darker areas.
⚠ WARNING Existing lighting system does not replace adequate overhead lighting.

- A **frame (U-joint technology)** on top of the motor base allows the main head to move to all sides and it gives more grinding capacity.
- The **controls** are positioned on top of the electrical box (fig.1.3)
- The **electrical box** (fig.1.3) contains the electric switching devices and the inverter.
- The **main feeding cable** is connected with a plug and socket on top. The motor feeding cable is plugged into the socket located on the bottom of the box.
- The **tank** is on the opposite side of the frame, so that the weight of the water has no influence on the operation of the machine. The frame weight, on the other hand, is fully absorbed by the driving wheels. An electric pump sprays the water through a front sprayer or internal.
- The **motor** is mounted on the base plate and is driving the three heads with a belt system.
- The **planetary head** is driven by a second flat belt.

Figure 1.1


Figure 1.2

ENVIRONMENTAL CONDITIONS

The temperature range for operating the Lavina® S-E machine outdoors is between 41°F and 86°F or 5°C and 30°C. Never use the Lavina® S-E machine during rain or snow when working outdoors. When working indoors, always operate the machine in well-ventilated areas.

ELECTRICAL CONNECTION

The voltage (Volt) and power (Ampere) are displayed on a label on the electrical control box to avoid any incorrect connection. Refer to these before connecting the power. To avoid electrical shocks, make sure the ground power supply is functioning properly.

Figure 1.3

VACUUM CONNECTION

A connection for a vacuum dust extractor is located on the carriage. The Lavina® S-E machine does not include a vacuum dust extractor. The customer must purchase the vacuum dust extractor separately. The hose of the vacuum extractor must be Ø 50 mm and can be glided over the pipe. The vacuum dust extractor must be adapted for floor grinders and have a minimum air displacement of 320m3/h with a negative vacuum of 21 kPa.

TECHNICAL DATA

	Lavina® 25-S-E	
Voltage/Hz	3 ph x 380V 50-60Hz	
Amperage	Max 15 Amps	
Power	7,5 kW	10 HP
Tool holder rpm	300-1100 rpm	
Working width	655 mm	25”
Tool diameter (QC Plate)	3x 225 mm	3x 9”
Weight	251 kg	553 lbs
Grinding pressure	130 kg	287 lbs
Additional weight	max 2x 29 kg	max 2x 64 lbs
Application	wet and dry	
Vacuum hose port	Yes	
Water tank capacity	20 l	5.2 gal
Water feed	with pump (peripheral and front)	
Cable length	17.4 m	57 ft
Machine LxWxH	1880x690x1180 mm	74x27.2x46.5”
Packing LxWxH on skid	1150x730x1530 mm	45.3x28.7x60.2”
Packing LxWxH Crate 1	1150x730x1100 mm	45.3x28.7x43.3”
+ Crate 2	1150x730x 900 mm	45.5x28.7x35.4”

CE-CERTIFICATION

The Lavina® S-E machine is designed to operate correctly in an electromagnetic atmosphere of industrial type and is equipped with all the mechanical and electrical safety protections in conformity with the following European CEE rules and regulations:

The Lavina® S-E machine complies with the Safety Directive for machines 2006/42/EC, the EMC Directive 2004/108/EC and the Low Voltage Directive 2006/95/EC.

Also complies with the norms in use BDS EN ISO 12100, BDS EN 13862,BDS EN ISO 13857, BDS EN 349, BDS EN ISO 13850,BDS EN 13732-1, BDS EN 953, BDS EN ISO 13849-1,BDS EN 1037, BDS EN ISO 5349-1, BDS EN ISO 11201, BDS EN ISO 3744,BDS EN 1033:2002, BDS EN 60204-1,BDS EN 1837, BDS EN 61000-6-4, BDS EN 61000-6-2, BDS EN 61000-4-2, BDS EN 61000-4-4, BDS EN 61000-4-5,BDS EN 61000-4-11, BDS EN 55016-2-1

Test results are a part of the machine’s technical information and can be sent upon a special request. The machine is delivered with the CE mark exposed and provided with a EC declaration of conformity.

VIBRATIONS

The measured vibration value on the surface of gripping in case of guiding the machine is a_{hw}=2,17m/s^2. The measurement is made in accordance with the BDS EN ISO 1033 and BDS EN ISO 5349-1.

SONOROUS EMISSIONS

The maximum noise level at distance of the machine of 1m in case of working at idle does not exceed 70 dB(A). The measurement is made in accordance with the BDS EN ISO 11201 and BDS EN ISO 3744.

LABEL DATA

The data on the label provides the correct Voltage and kW (needed for operational purposes);
Weight (needed for transportation purposes); production year and serial number (needed for maintenance purposes

CUSTOMER SERVICE

For customer assistance and technical support call your local distributor or call Superabrasive Ltd. or visit us at: www.superabrasive.com , where you can download a copy of this manual.

2. SAFETY INSTRUCTIONS

RECOMMENDED USE ⚠ WARNING

The Lavina® S-E machine is designed and manufactured to grind and polish concrete, terrazzo, and natural stone floors. It can be used for renovation as well as for polishing. The machine is designed for dry or wet use. When using it dry, use a vacuum of appropriate size. For more information, please refer to the chapter on handling the vacuum connection.

PROHIBITED USE ⚠ WARNING

The machine MUST NOT be used:

- For applications different from the ones stated in the general description chapter.
- For non-suitable materials. In environments which:
  - Possess risks of explosion,
  - Possess high concentration of powders or oil substances in the air,
  - Possess risks of fire Feature inclement conditions,
  - Possess electromagnetic radiation.

PREPARATION FOR WORK ⚠ WARNING

Make sure that:

- You have closed the work area, so that no person unfamiliar with operating the machine can enter the area.
- The tool plate and tools are adjusted to the machine properly.
- There are no missing parts of the machine

- The machine is in upright working position.
- The protection devices are working properly.
- The electrical cable is free to move and follow the machine easily.
- In order to keep the electrical cable from being damaged, no vehicle should cross the zone where electrical cables are situated.

PROTECTION DEVICES ⚠ WARNING

The machine is equipped with several protection devices including the following:

- An emergency stop button
- A protection skirt and a hood for protecting the tool plates.

These devices protect the operator and/or others persons from potential injuries. Do not remove them. Before using the machine, please ensure that all protection devices are mounted and function properly. The Security plate prevents the QuickChange pads to from loosening during work

ARREST FUNCTIONS ⚠ WARNING

Functions of arresting of the machine are following:

- Button to stop the motor (category 1)
- Emergency button (category 1)

SAFE USE ⚠ WARNING

The Lavina® S-E is designed to eliminate all risks correlated with its use. However, it is not possible to eliminate the risks of an eventual accident with the machine. Unskilled or uninstructed operator may cause correlated residual risks. Such risks are:

- Position Risks: due to operator's incorrect working position
- Tangling up Risks: due to wearing inappropriate working clothes
- Training Risks: due to lack of operational training.

NOTE: : In order to reduce all consequences of the above-mentioned risks, we advise that machine operators will follow the instructions in the manual at all times.

RESIDUAL RISKS ⚠ WARNING

During the normal operating and maintenance cycles, the operator is exposed to few residual risks, which cannot be eliminated due to the nature of the operations.

BEFORE YOU BEGIN ⚠ WARNING

- Working area must be clear from any debris or objects.
- A first-time operator must always read the manual and pay attention to all safety instructions.
- All electric connections and cables must be inspected for potential damages.
- Ground wire system of the power supply must be also inspected.
- Perform general daily inspections of the machine and inspect the machine before each use.
- Always inspect the safety devices: Mount the Security plate for the QuickChange pads.
- The emergency break must be clear and working
- The tool protector must be working
- The machine must be clean
- Never operate the machine in the rain!
- Confirm that there are no missing parts especially after transportation, repair or maintenance.
- Before filling the water tank with water make sure the machine is not working and the main switch is turned off.
- Before turning on the machine make sure that the base is placed on the floor, the machine MUST NOT be in an upright position when turned on!

OPERATING MACHINE ⚠ WARNING

When operating the Lavina® S-E, make certain that there is no one, but you around the machine.
Never leave the machine unattended while working.
The electrical cable must move freely and must be damage- free.
The water hose must move freely and must be damage-free.
Check to make sure the floor, you are preparing to work on, is even. If the floor is uneven, it may damage the machine.

After Work is completed ⚠ WARNING

- Clean the machine and its surroundings properly
- Empty and clean the water tank
- Unplug the machine and wind up the electrical cable
- Store the machine in a safe place

THE WORK AREA ⚠ WARNING

- Make certain that people or vehicles do not enter the work area.
- Avoid cables and hoses being in the way.
- Always check the floor for debris

PERSONAL PROTECTIVE EQUIPMENT (PPE) ⚠ WARNING

- Always wear safety shoes when working with the machine.
- Always wear ear protectors when working with the machine.
- All personnel in the immediate work area must wear safety glasses with side shields.
- Always wear safety gloves when changing the tools.
- Always wear clothes suitable for the work environment.

OPERATOR ⚠ WARNING

The Lavina® S-E machine.
The operator must know the machine's work environment. Only one operator at a time can work with the machine. The operator must be properly trained and well instructed prior operating the machine.

- The operator must understand all the instructions in this manual.
- The operator must understand and interpret all the drawings and designs in manual.
- The operator must know all sanitation and safety regulations pertaining to the operation of
- The operator must have floor grinding experience.
- The operator must know what to do in case of emergency.
- The operator must have an adequate technical knowledge and preparation.

3. HANDLING AND TRANSPORTATION

PREPARING THE MACHINE FOR TRANSPORTATION


Figure 3.1


Figure 3.2


Figure 3.3

Unplug the motor cable plug from the control box and disconnect the water hose from the main head by pulling it out (Fig.3.1) (Fig.3.2). Wind the electrical cable on the carriage. Release the pin sets which attach the head to the carriage. Pull out the vacuum hoses (Fig.3.3), and dismount the head from the carriage.
The head of the LAVINA® S-E machine has one bar for support and is used as handles for easy moving and transportation.

LIFT THE MACHINE FROM WORKING TO TOOL MOUNTING POSITION

Push the front handle down and swivel it to the front (Fig.3.4). Pull the handle up and ensure the head is a stable upright position, for mounting/dismounting the tool. Ensure that the water tank is empty before flipping the machine. Pull the head in upright position (Fig.3.5). **The machines manufactured after Jan.1 2014 are with changed locking of the front handle as shown on the fig.3.4.1**


Figure 3.4


Figure 3.4.1


Figure 3.5


Figure 3.6

LIFTING

Lifting the machine by crane is possible with the eye bolt, which is mounted on the carriage (see Fig. 3.6). The eye bolt and machine construction is rated only for the weight of the machine. Do not list any other leads on the machine. Always use hoisting equipment rated for 300 kg or 660 lbs.

ADJUSTING THE HANDLE

The Handle on the frame is adjustable in height and allows the operator to work in a correct and safe posture. **The machines manufactured after Jan.1 2014 are with changed locking of the handle on the frame.The unlocking is by pulling the handle (fig.3.7.1)The locking is automatically under action of the spring.Fig.3.7.2 shows all possible position of the handle.** Choose the upright position to move easy the machine.


Figure 3.7


Figure 3.7.1

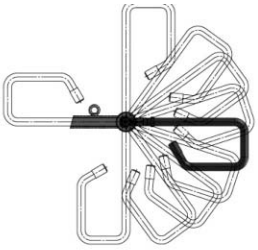
Figure 3.7.2


Figure 3.8

STORAGE

Always store and transport the Lavina® S-E machine in a dry place. Never transport the Lavina® S-E machine unprotected; it may be damaged if transported unprotected during rain or snow.


Figure 3.9


Figure 3.10


Figure 3.11

⚠ WARNING

When storing the machine the temperature may fall down to or to less than 32F (or 0° C) you should empty the water from the system using the following steps:

- Pull out the hose of the tank (Fig.3.9)
- Using compressed air blow out the water from the system for the two positions of the turn-cock (Fig. 3.10, Fig. 3.11).

4. OPERATION

PRELIMINARY CONTROLS

Inspect the working area as explained in the safety instructions. For wet use, fill the water tank when the electrical cable is disconnected. Connect the vacuum extractor and ensure that the vacuum hose is clear and that it will easily follow the machine. Plug in the machine and make sure that the power cord is free to follow the direction of the working Lavina® S-E machine.

WATER FLOW CONTROL UNIT

The operator can choose the water sprayer in the front when the tap is in the horizontal position (Fig.4.1), the water will spray under the cover of the machine when the level is in the vertical position (Fig.4.2).The flow regulating valve located on the tank (Fig.4.2.1) is increasing or reducing the water flow to the working area – in front of the machine or under the main head cover of the machine/only for machines produced after Jan.1 2014/.


Figure 4.1


Figure 4.2


Figure 4.2.1

ADJUSTING AND MOUNTING TOOLS

Mount the tools only after ensuring that there is enough diamond bond material left. Be sure that the plates are always clean before mounting. WARNING: Always secure the "QuickChange" pads with the security plate (Fig.4.3), lock with the tool holder key (Fig.5.3). Diamond tools with Velcro are attached to three 9inch foam plates (Fig.4.4). The foam plates are mounted on the key lock (butterfly). Always use the tool holder key (Fig.5.3).

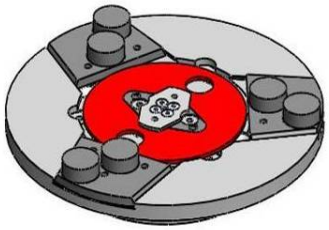
Figure 4.3


Figure 4.4


Fgure 4.5

FRAME BLOCKING (U-JOINT]

The relation between the working head and the trolley is the frame (U-joint), which allows the rotation of two perpendicular axes to better follow the floors' profile.

The movement along the one axis can be secured with two screws (fig.4.5) and that blocks the lateral movement of the machine.

THE CONTROL BOARD

1. **Power cable plug**
2. **Digital RPM indicator** Indicates the revolution per minute of the grinding plates (not the revolution per minute of the entire unit).
3. **Polishing/Grinding switch** In "grinding" position, the operator has the possibility to control the rpm from 300 until maximum 700 rpm. In "Polishing" position from 300-1100 rpm maximum.
4. **Lamp cable gland**
5. **Inverter alarm led** Lights blue when the inverter goes into alarm mode.
6. **Water pump switch** Lights orange when the water pump is working.
7. **Power led** lights green when the power is on

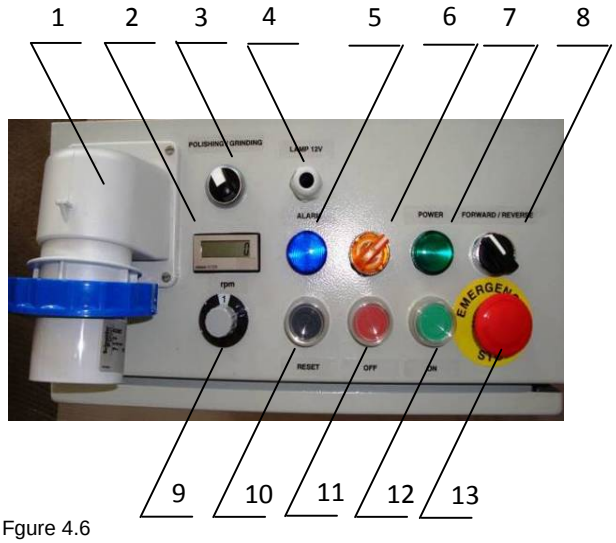

Fgure 4.6

8. **Forward/Reverse switch** choose forward for clockwise rotation of the grinding plates or reverse for anti-clockwise rotation of the grinding plates
9. **Potentiometer** changes the RPM of the grinding plates from 300-1100 rpm
10. **Reset button** resets the alarm of the inverter
11. **OFF button** stops the motor
12. **ON button** starts the motor
13. **Emergency button** used in Emergency situations for stopping the motor

STARTING THE MACHINE

First, follow the directions in chapter Safety Devices and Safety Instructions. Next, pull the emergency stop (13) to ensure that the machine is in working condition. Check the potentiometer (9) and ensure that it is set at working speed. If working wet, add water to the floor's surface. If working dry, omit this step, and instead, switch on the vacuum unit. Finally, hold the machine firmly and push the start button (12).

OPERATING THE MACHINE

Guide the machine in straight lines across the floor, and with each new line overlap a little bit of the previously completed surface. Work at a constant speed, allowing the tools time to work at a speed appropriate for the tools' grit size. Avoid vibrations. Do not stop the Lavina® S-E on one spot while the tools are still working because they will leave marks on the floors' surface. When working wet, first choose the water tap (Fig.4.2) and the position for the water feed, periodically start to pump and release water onto the floor's surface (Fig.4.6 Pos.6). When working dry, check the floor's surface periodically to ensure that dust is not accumulating on the surface, also check regularly to make sure your vacuum is working properly.

STOPPING THE MACHINE

The The stopping of the machine must be done gradually until the motor stops. Do not stop moving the machine before arresting the motor as the tools could damage the surface. To stop, push the "Off" button (11). Use the emergency button (13) only in emergency or use it to switch the power totally off. Remember not to hold the machine in one spot before turning off the motor.

ALARM

The alarm light (5) will light incase inverter goes into alarm mode. The most common failure is motor in overload. To reset the mode, push the "reset" button (10).

5. TOOLS AND ACCESSORIES

Figure 5.1

WEIGHTS

Superabrasive offers additional weights for increasing the productivity of the machine (Fig.5.1). Each additional weight weighs about 64 lbs or 29kg. Each individual application, type and condition of surface, power capacity of the outlet, etc. will determine the number of weights you can use without tripping a breaker. The weight stacks onto three posts that are around the outer bowl (Fig.5.2). The additional weights depend on the tools; it is not always possible to ass weights. Some tools work too aggressively and the machine can stop. The weight can be ordered with item number A08.00.00.00

Figure 5.2

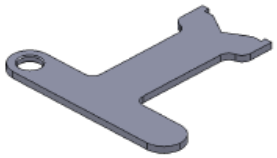

Figure 5.3

TOOL HOLDER KEY

The tool holder key (Fig.5.3) is used for adjusting, mounting and dismounting of the foam plates. Always use the key for mounting.
Item number is A03.00.00.00

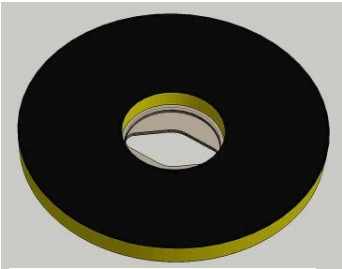

Figure 5.4

FOAM PLATE

Diamond tools with Velcro are mounted on the foam plate 9“(Fig.5.4). The foam plate is mounted on the “QuickChange”System.
Item number is LV-9-FP-S

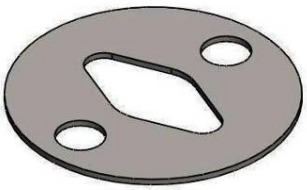

Figure 5.5

SECURITY PLATE FOR QUICKCHANGE PADS

Plate (Fig.5.5) used to ensure the “QuickChange” pads.
Item number is A38.00.01

6. POPULAR TOOLS

RECOMMENDED TOOLS

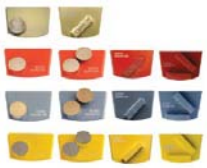

QuickChange System and Tooling feature extremely fast and convenient tool changes, and a long tool life, providing for great long-term cost savings. The QuickChange pads are produced in four different bonds for super hard, hard, medium and soft concrete, in a variety of grit sizes. They are offered with
1 or 2 buttons or rectangular segments, which allows you to customize the aggressiveness of the cut.

Calibra grinding discs: our popular ceramic bond discs are designed for the removal of difficult scratches and they save you valuable time by eliminating the need for multiple passes with metal tools. They can be used wet or dry, and are best for hard concrete applications.
They are 3-inch, with included Velcro back attachment.

NATO® polishing discs feature a special resin formula designed for both wet and dry applications and a unique design with wide channels allowing for work on a cleaner surface and ensuring a quality polish. Available in 3 and 4 in sizes. They are with included Velcro attachment.

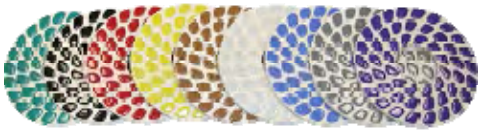

V-HARR® Premium Polishing Pads are designed for mechanically polishing and restoring concrete; also ideal for terrazzo and hard stone floors. V-HARR® pads are offered in a wide variety of diameters and grit sizes to accommodate many applications. Dry use is strongly recommended.

Shine Pro® are high quality diamond-impregnated pads for floor maintenance. Available in a variety of sizes, and are great for daily use. When used wet, they require only water (no wax or chemicals needed) and are a very environmentally friendly solution for maintaining floors.

Use only Superabrasive's recommended tools. For more tooling options, visit www.superabrasive.com

7. EXPLODED VIEW

LAVINA® 25-S GENERAL EXPLODED VIEW (FIG.7.1)
LAVINA® 25-S TOP COVER EXPLODED VIEW 1 (FIG.7.2)
LAVINA® 25-S PLANETARY DRIVE EXPLODED VIEW (FIG.7.3)
LAVINA® 25-S TOP COVER EXPLODED VIEW 2 (FIG.7.4)

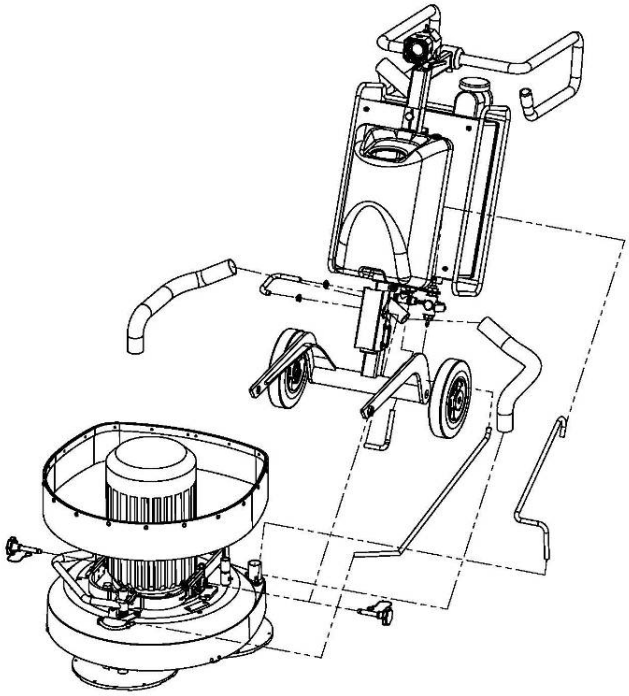

Figure 7.1

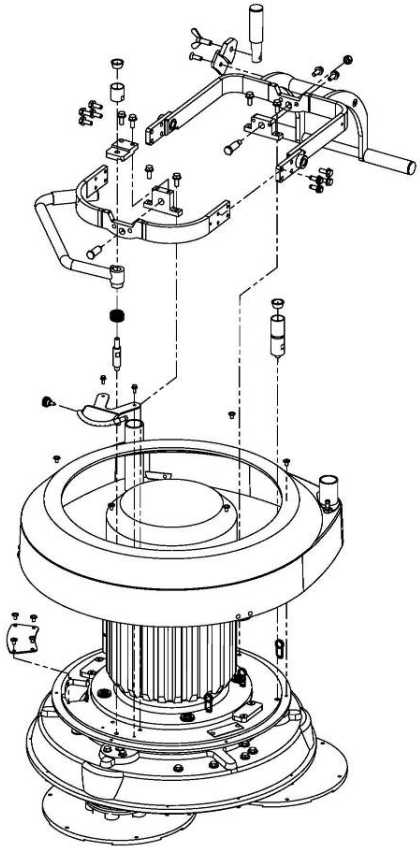

Figure 7.2

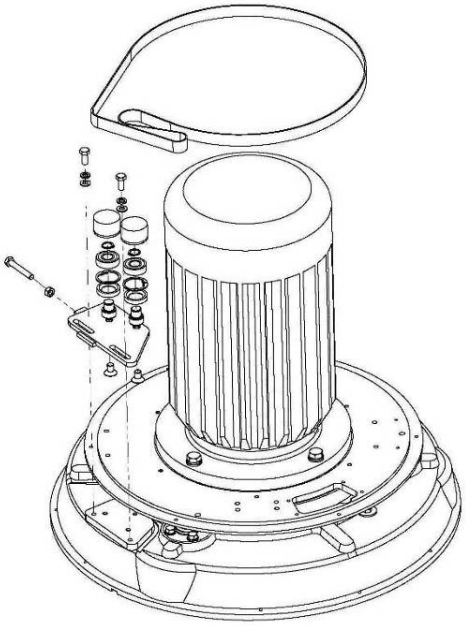

Figure 7.3

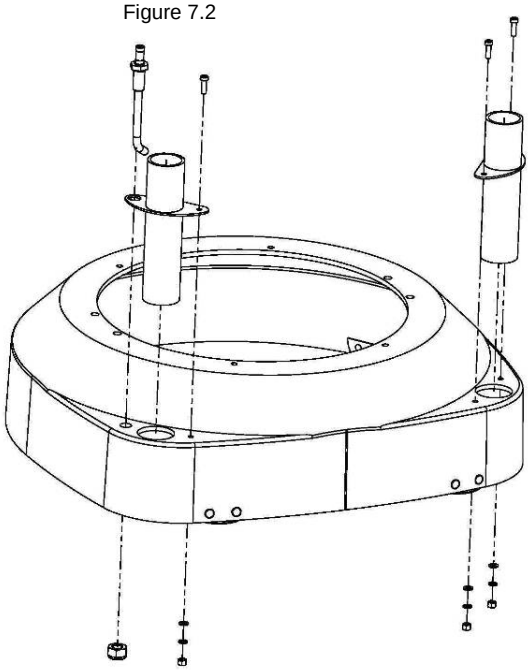

Figure 7.4

LAVINA® 25-S BOTTOM COVER EXPLODED VIEW 1 (FIG.7.5)
LAVINA® 25-S BOTTOM COVER EXPLODED VIEW 2 (FIG.7.6)
LAVINA® 25-S PULLEY UNITS EXPLODED VIEW (FIG.7.7)
LAVINA® 25-S CARRIAGE EXPLODED VIEW (FIG.7.8)
LAVINA® 25-S TOOL HOLDER EXPLODED VIEW (FIG.7.9)

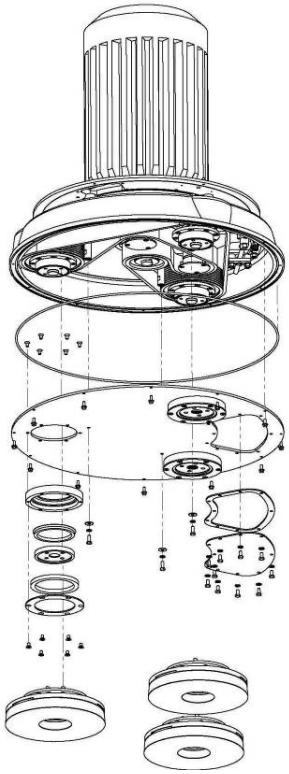

Figure 7.5

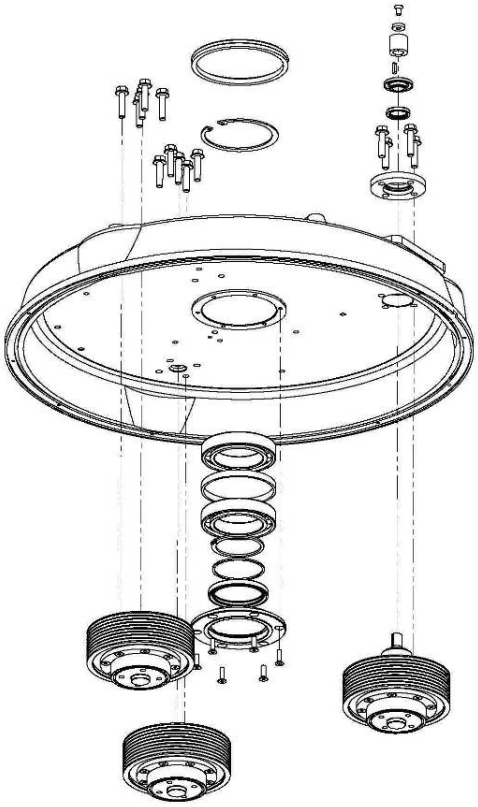

Figure 7.6

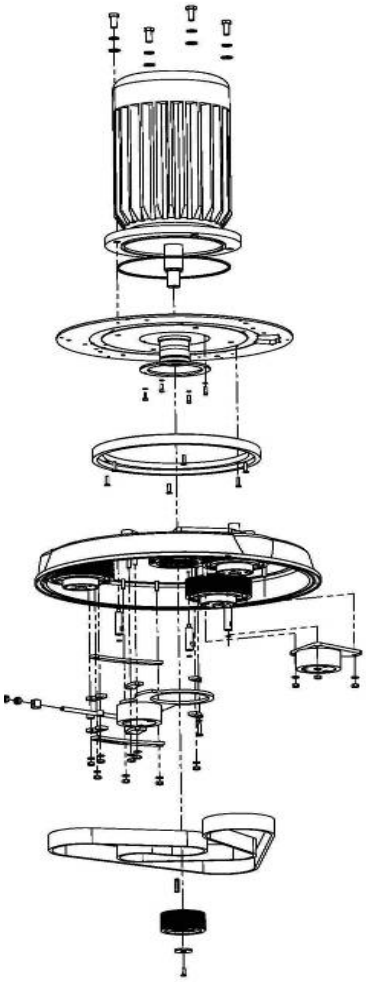

Figure 7.7

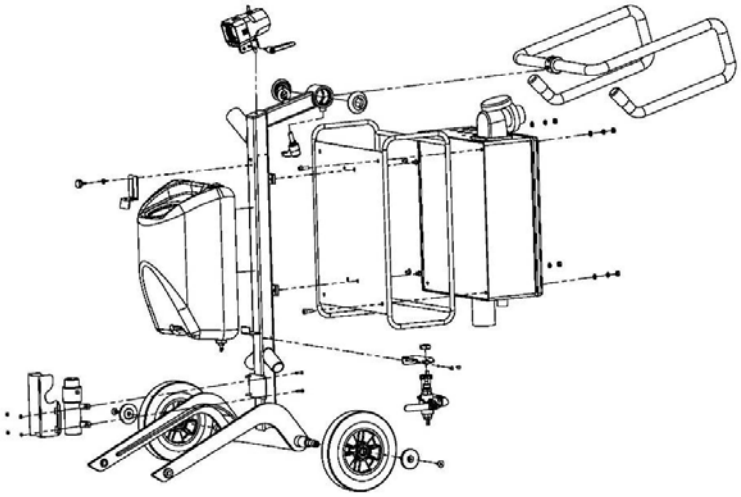

Figure 7.8

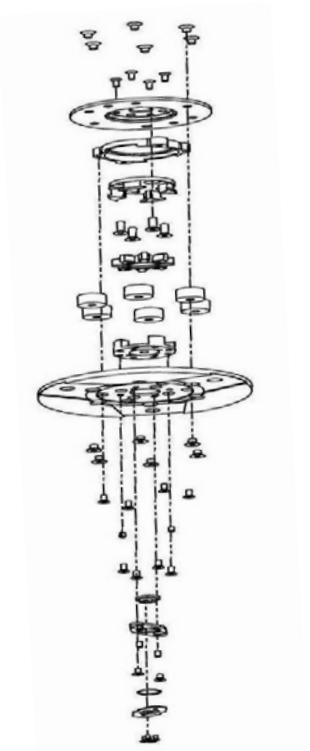

Figure 7.9

8. MAINTENANCE AND INSPECTION

CLEANING

Keep your machine clean. Cleaning the machine in a regular basis will help detect and solve potential problems before they can cause damage to the machine. Most importantly, check and clean the tool plate connections, power cords, plugs, vacuum hoses, and water tank.

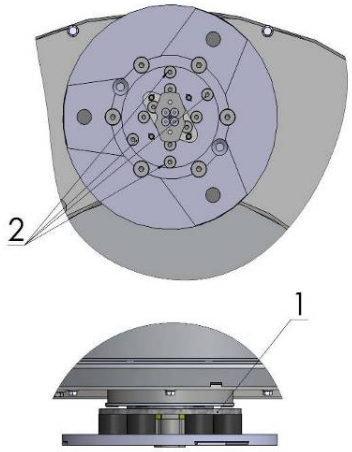

Figure 8.1

CHECK DAILY

After operating the Lavina® S-E machine, the operator should conduct a visual inspection of the machine. Any defect should be solved immediately. Pay attention to power cords, plugs, vacuum hoses, loose bolts or screws.

Tool holders: Buffers and spiders are consumables and must be visually checked on a daily basis and replaced if necessary. Make sure the flanges or discs are securely locked in place. The key lock holders (butterflies) should also be checked.

Check the rubber buffers and make sure the holders are secure. The flange holding the buffers (Fig.8.1, 1) has to be firmly secured to the unit. If there is a gap seen here, that means the screws securing the holder are loose. The screws have to be tightened immediately to safely operate the machine. Working with loose screws could cause serious damage to the machine. The tightening force of the screws has to be 25-30N.m (18-22ft/lbs).

It is very important to regularly check the screws that secure the “QuickChange” holder to the safety part (Fig.8.1, 2), so that the holder will not fly away if the buffers get damaged. The “QuickChange” should be clean also. The tension of the planetary belt can be checked by moving the main head and feeling the resistance of the moving pulleys, tighten the belt if necessary.

CHECK AND REPLACE AFTER THE FIRST 15 WORKING HOURS

Check the belt tension after 15 hours of working with the machine. The bottom cover has a control cover (Fig.8.2) that allows fast and easy control and correction of the belt. It is recommended that the belt tension be checked after the first 15 hours and tightened if necessary. For the correct tension, see TROUBLESHOOTING “mounting the belt”. Every time you open the control cover, mount back all the screws with washers.

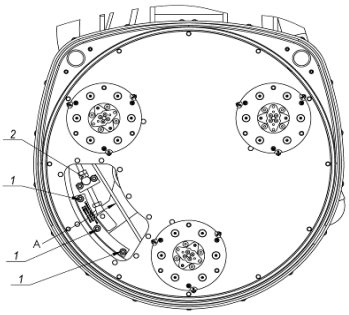

Figure 8.2

CHECK EVERY 200 WORKING HOURS

Every 200 working hours, the operator should inspect all parts of the machine carefully. Most importantly, inspect and clean the tool plate connections, power cord plugs, vacuum hoses and water tank and filter. Also, check the water flow of the pump. Check the guard assembly. Make certain the wheels are clean and rotate properly. Inspect the control buttons. If there are defective control parts, they should be replaced immediately. Replace worn vacuum and water hoses. Check the tension of the belt and to tighten if necessary. For the correct tension, see TROUBLESHOOTING.

Dismount the tool holders (See TROUBLESHOOTING) and replace all parts (spider, buffers, sealer caps, “O” rings) that have the slightest damage.

Open the inspection cover on the motor base to check on the planetary driving belt, by moving the main head the belt should not slip on the planetary pulley and drive the pulleys.

CHECK EVERY 400 WORKING HOURS

Besides the checks of 200 working hours, replace sealer and V-rings like described in chapter “TROUBLESHOOTING REPLACING BELT AND PULLEY UNITS. Check if belts and bearings are in good condition, change if needed.

VACUUM

As stated previously, frequently check hoses and other parts for clogging.

WATER LEAKS

Leaking parts should be replaced immediately because the water could damage your machine.

MECHANICAL PARTS

Parts such as the belts, seal rings, cap rings, spiders, buffers and guard assembly are subject to wear and must be replaced as needed.

ELECTRICAL SYSTEM

Dust should not enter the control box, as it will destroy the controls. Remove (blow out) any dust present.

LAVINA® 25-S-E ELECTRICAL SCHEMES WITH YASKAWA INVERTER

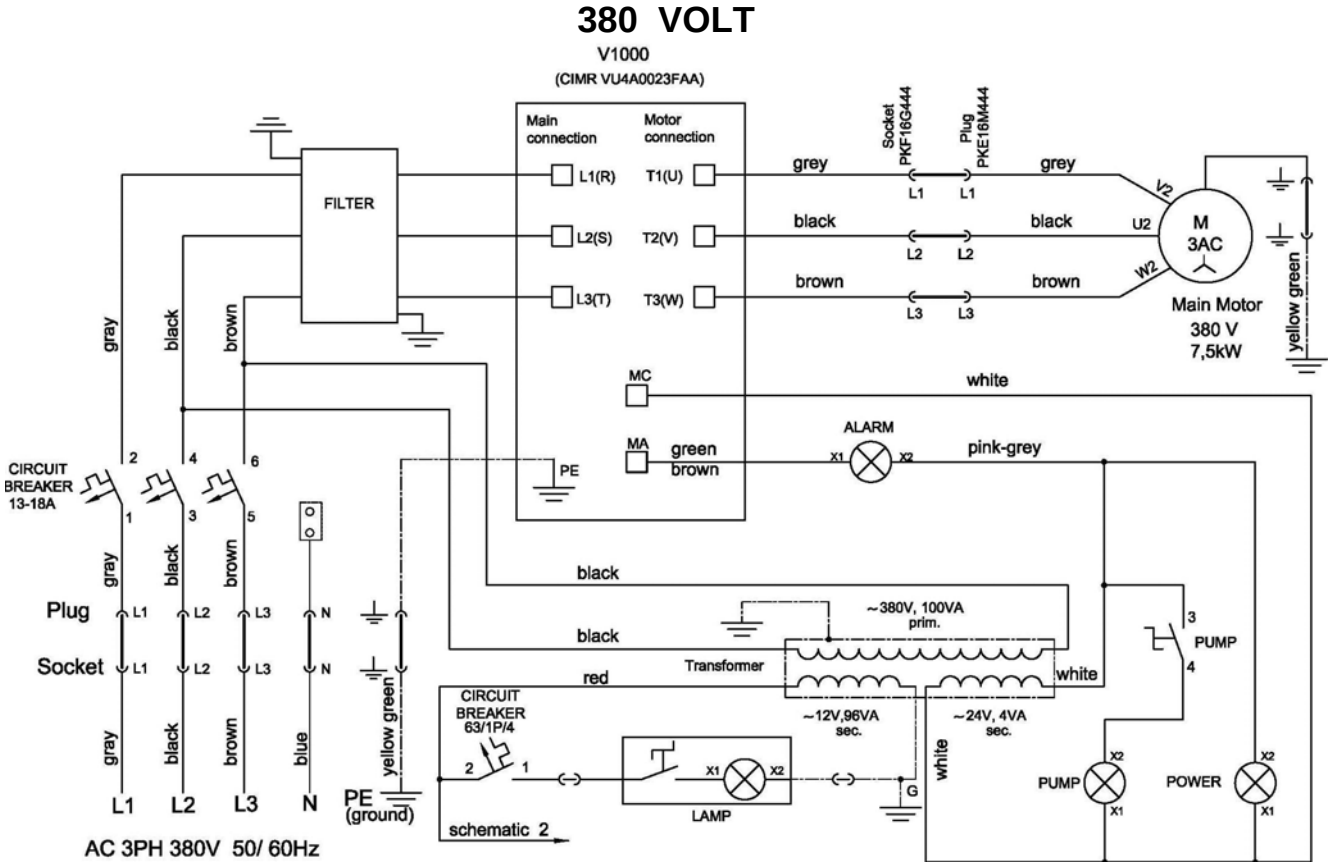

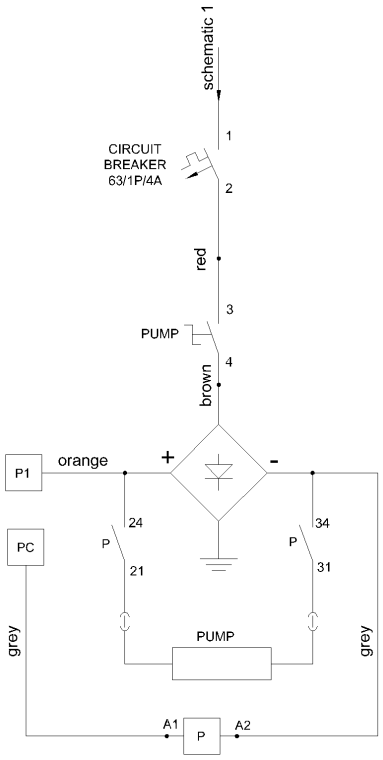

LAVINA® 25-S-E ELECTRICAL SCHEMES YASKAWA CONNECTION MAIN CIRCUIT TERMINALS

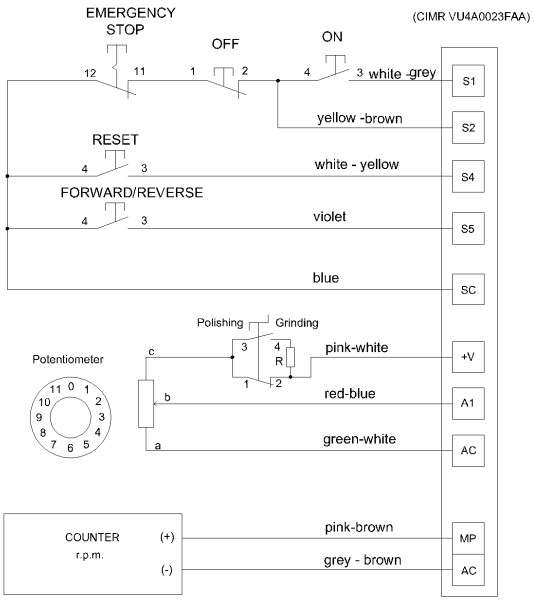

The motor is connected in "Star" 380 Volt, reminder for the wire connection of the motor

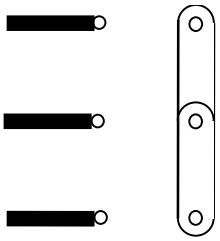

9. TROUBLESHOOTING

INDEX OF PROBLEMS AND SOLUTIONS

9.1 REPLACING POWER CORD AND PLUGS

When replacing the power cord or plugs always use cords and plugs with the same specifications as the original ones.
Never use lower quality or different types of cords and plugs.
In addition, take into consideration the distance between the appliance and the electrical source. The greater the distance, the greater the resistance and the less current that will be available at the other end, there will be a voltage drop and the inverter will sign into alarm mode. This will also happen if several machines are working on the same line or when the generator is underrated.
In general, our standard power cable can be doubled in length; if you need longer lengths then you must replace all the cables with cables of a bigger gauge rate for the length and amperage.

9.2 DISMOUNTING AND MOUNTING TOOL HOLDER TO CHANGE BUFFERS AND SPIDER, CHANGING V-RINGS AND FELT-RINGS


Figure 9.2.1


Figure 9.2.2

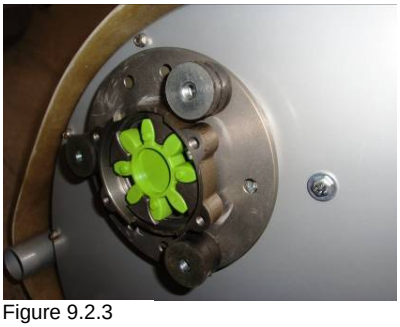
Figure 9.2.3


Figure 9.2.4


Figure 9.2.5


Figure 9.2.6

To check or replace the buffers and the spiders, the tool holder has to be removed. Remove the countersunk screws on top of the buffer (Fig.9.2.1). Take the disc off (Fig.9.2.2), now the spider can be removed or replaced (Fig.9.2.3). By loosening the four Hex cap bolts (Fig.9.2.4), the disc will come loose (Fig.9.2.5) and the buffers can be replaced (Fig.9.2.6). Attention, when mounting always use the “blue” thread locking adhesive, except on the bolts to lock the buffers (Fig.9.2.5). Always use the original bolts. Depending on the number (3, 4, or 6) of buffers, the holder can be more flexible or rigid.


Figure 9.2.7

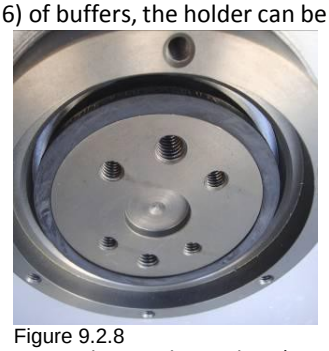
Figure 9.2.8


Figure 9.2.9

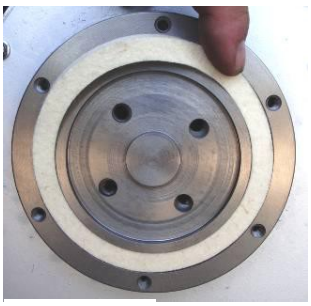

When the tool holder is removed, you can change the sealers (V-Ring and Felt-Ring).
Take out the Felt-Ring, Adaptor and V-Ring. Before mounting check on which side the adaptor is sitting, remember the correct side. Mount the V-Ring with the smallest lip of the V to inside (Fig.9.2.7) just push the V-ring so the top is on the same level as the pulley top (Fig.9.2.8).
Then take the adaptor in the correct way and push the V-Ring down with the adaptor (Fig.9.2.9). The lowest lip of the V-Ring should only barely touch its gliding surface; also never push the V-Ring down with fingers. Mount now the Felt-ring on top (Fig.9.2.10). Close the sealers with the cap (Fig.9.2.11).

9.3 TENSIONING AND REPLACE THE PLANETARY BELT


Figure 9.3.1


Figure 9.3.2


Figure 9.3.3


Figure 9.3.4


Figure 9.3.5

If the belt slips or is broken separate the carriage from the main head, pull out the motor plug(Fig.9.3.1), water-(Fig.9.3.2) (Fig.9.3.3), and vacuum tubes (Fig.9.3.4). Take off the handles, fork, top frame, and weight holders so you can dismount the top cover (Fig.9.3.5).

9.4 TENSIONING USED PLANETARY BELT

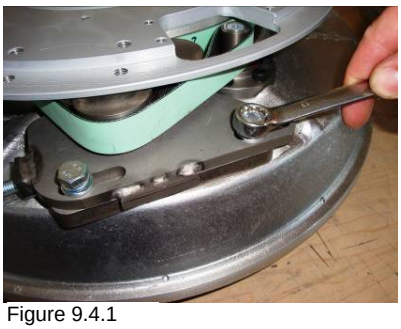
Figure 9.4.1


Figure 9.4.2

A noticeable loss of speed in the planetary movement means the belt may need to be tensioned, see 9.5 Mounting and tensioning a new planetary belt.

9.5 MOUNTING AND TENSIONING A NEW PLANETARY BELT

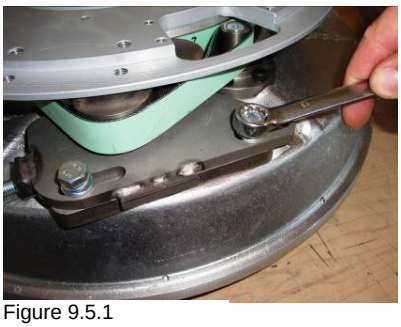
Figure 9.5.1

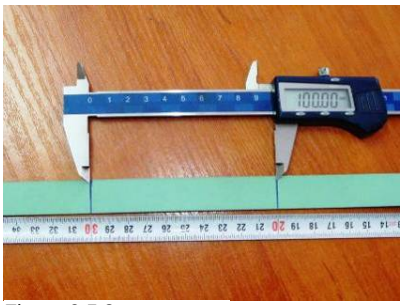
Figure 9.5.2

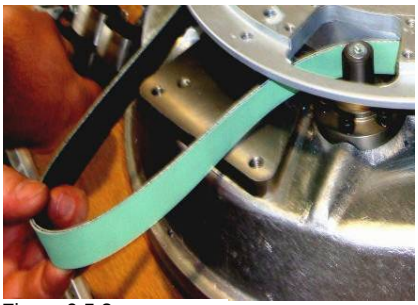
Figure 9.5.3


Figure 9.5.4

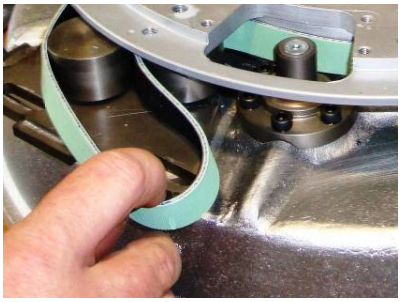
Figure 9.5.5

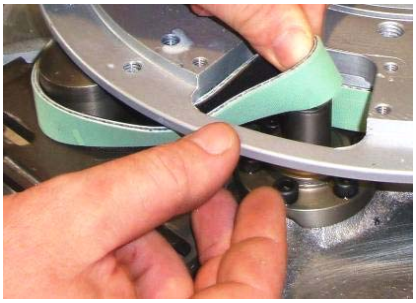
Figure 9.5.6

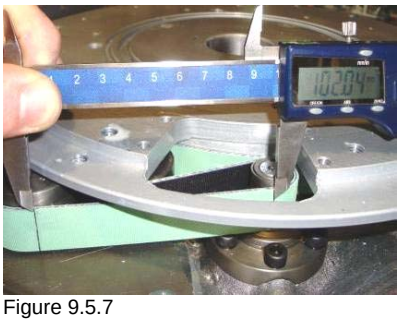
Figure 9.5.7


Figure 9.5.8


Figure 9.5.9

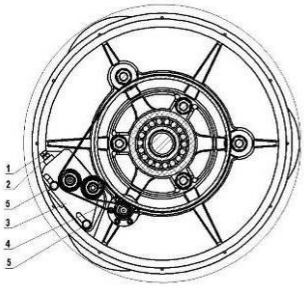

Completely remove the tensioning device (Fig. 9.5.1). Make 2 signs on the dismounted belt that are exactly 10cm from each other (belt without tension) (Fig.9.5.2). The purpose is to measure 10.2 cm on the belt when tensioned. **ATTENTION: NEVER "OVER" TENSION THE BELT, THE BELT WILL BE DAMAGED AND IT WILL NEVER RECOVER FROM ITS ORIGINAL TENSION**

Mount the belt back around the planetary pulley; see that the belt is behind the driving pulley (Fig.9.5.3). Put the belt around the left roller of the tensioning device (Fig.9.5.4). Put the tensioning device back in place and pull the belt from the roller on the right side (Fig.9.5.5). Put the belt around the driving pulley (Fig.9.5.6). Begin to tension until the previous 10cm measurement equals 10.2cm (Fig.9.5.7 and Fig.9.5.8). Tighten the tensioning device while turning the bolt and moving the planetary head so the belt can slide (Fig. 9.5.8). Do not forget to lock the tensioning device (Fig.9.5.9).

9.6 CHECKING THE TENSION OF THE BELT


Figure 9.6.1


Figure 9.6.2


Figure 9.6.3


Figure 9.6.4


Figure 9.6.5

Open the checking cover to reach the belt and tension device (Fig.9.6.1). While tensioning, be sure to regularly check the tension. Push the belt down with a pressure of 71N. This is approximately 7 kilograms or 15 pounds; with this pressure the belt should move 3.5-4 mm or 1/8". It is recommended that the tensioning of the belt be measured with Optikrik II Device (Measuring range: 500-1400 N) (Fig.9.6.2). The original pressure P=1400 N and after working awhile is P=1100 N.

ATTENTION:NEVER "OVER" TENSION THE BELT, THE BELT WILL BE DESTROYED AND IT WILL NEVER RECOVER ITS ORIGINAL TENSION

Loosen the contra nuts (Fig.9.6.3), lightly loosen the three bolts of the tension device (Fig.9.6.4), and adjust the tension with the nut seen in (Fig.9.6.5). When the right tension is reached: close the contra nuts and the three bolts of the support. Reassemble in the same manner.

PLEASE MAKE SURE YOU CHECK THE TENSION OF THE BELT AFTER THE FIRST 15 HOURS OF OPERATION

9.7 REPLACING THE PULLEY UNITS

Dismount guard and top cover as previous described.


Figure 9.7.1

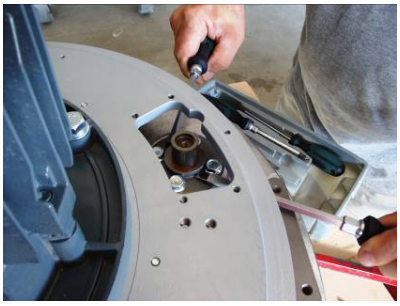
Figure 9.7.2

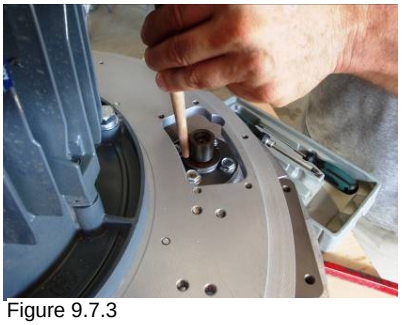
Figure 9.7.3


Figure 9.7.4


Figure 9.7.5


Figure 9.7.6


Figure 9.7.7


Figure 9.7.8


Figure 9.7.9


Figure 9.7.10


Figure 9.7.11


Figure 9.7.12

Dismounting the driving pulley: take the top screw out to release the bushing (Fig.9.7.1), push the bushing together with the washer up (Fig.9.7.2), push washer down of the bushing (Fig.9.7.3)., take bushing out (Fig.9.7.4), push key out (Fig.9.7.5), now the washer releases (Fig.9.7.6), dismount sealer cap (Fig.9.7.7)(Fig.9.7.8), the pulley can be released with two crowbars but do not use excessive force (Fig.9.7.9), push the sealer cap to dismount (Fig.9.7.10), by mounting back secure with sealant (Fig.9.7.11), center the holes to mount the pulley (Fig.9.7.12).


Figure 9.7.13


Figure 9.7.14


Figure 9.7.15

For the two other pulleys, loose the five bolts of each pulley between the base plate and the motor base disc (Fig.9.7.13). An oil seal ring (Fig.9.7.14) and a seal (Fig.9.7.15) should be placed on top of the pulley before mounting.

9.8 MOUNTING THE BELT

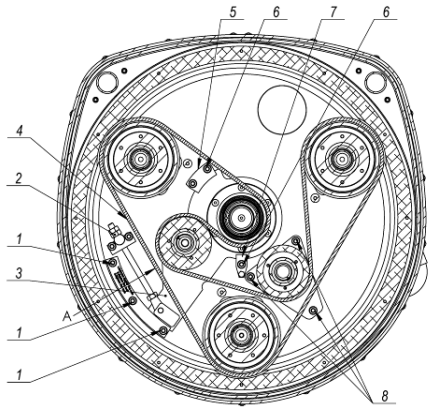

Figure 9.8.1

See here the schematic of the belt on the pulleys (Fig.9.8.1).

To dismount/mount the belt, follow the tensioning instruction in chapter: Checking the tension of the belt.

9.9 MOTOR CONNECTION

In case the motor is being replaced, please follow the cable connections in the figures below (Fig.9.9.1).

Lavina® 25-S-E

The motor is connected in “Star” 380 Volt, reminder for the wire connection of the motor.

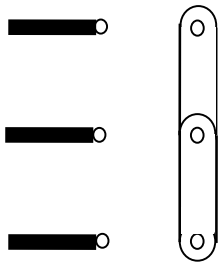

Figure 9.9.1

9.10 FAULT DIAGNOSIS INVERTER YASKAWA V1000

Pages are referring to

Yaskawa Electric SIEP C710606 18A YASKAWA AC Drive – V1000 Technical Manual

◆ Types of Alarms, Faults, and Errors

Check the LED operator for information about possible faults if the drive or motor fails to operate. *Refer to Using the Digital LED Operator on page 70*.

If problems occur that are not covered in this manual, contact the nearest Yaskawa representative with the following information:

- Drive model
- Software version
- Date of purchase
- Description of the problem

Table 6.4 contains descriptions of the various types of alarms, faults, and errors that may occur while operating the drive.

Contact Yaskawa in the event of drive failure.

Table 6.4 Types of Alarms, Faults, and Errors

Type	Drive Responses to Alarms, Faults, and Errors
Faults	When the drive detects a fault: • The digital operator displays text that indicates the specific fault and the ALM indicator LED remains lit until the fault is reset. • The fault interrupts drive output and the motor coasts to a stop. • Depending on the setting, the drive and motor may stop via different methods than listed. • If a digital output is programmed for fault output (H2-□□ = E), it will close if a fault occurs. • When the drive detects a fault, it will remain inoperable until that fault has been reset. *Refer to Fault Reset Methods on page 264*.
Minor Faults and Alarms	When the drive detects an alarm or a minor fault: • The digital operator displays text that indicates the specific alarm or minor fault and the ALM indicator LED flashes. • The motor does not stop. • One of the multi-function contact outputs closes if set to be tripped by a minor fault (H2-□□ = 10), but not by an alarm. • The digital operator displays text indicating a specific alarm and ALM indicator LED flashes. • Remove the cause of an alarm or minor fault to automatically reset.
Operation Errors	When parameter settings conflict with one another or do not match hardware settings (such as with an option card), it results in an operation error. When the drive detects an operation error: • The digital operator displays text that indicates the specific error. • Multi-function contact outputs do not operate. • When the drive detects an operation error, it will not operate the motor until the error has been reset. Correct the settings that caused the operation error to reset.
Tuning Errors	Tuning errors occur while performing Auto-Tuning. When the drive detects a tuning error: • The digital operator displays text indicating the specific error. • Multi-function contact outputs do not operate. • Motor coasts to stop. • Remove the cause of the error and repeat the Auto-Tuning process.

◆ Alarm and Error Displays

■ Faults

When the drive detects a fault, the ALM indicator LEDs remain lit without flashing. If the LEDs flash, the drive has detected a minor fault or alarm. *Refer to Minor Faults and Alarms on page 240* for more information. An overvoltage situation trips both faults and minor faults, therefore it is important to note whether the LEDs remain lit or if the LEDs flash.

LED Operator Display		Name	Page
bUS	bUS	Option Communication Error	242
CE	CE	MEMOBUS/Modbus Communication Error	242
CF	CF	Control Fault	242
CoF	CoF	Current Offset Fault	242
CPF02	CPF02	A/D Conversion Error	242
CPF03	CPF03	PWM Data Fault	243
CPF06	CPF06	Drive specification mismatch during Terminal Board or Control Board replacement	243
CPF07	CPF07	Terminal Board Communication Fault	243

LED Operator Display		Name	Page
CPF08	CPF08	EEPROM Serial Communications Fault	243
CPF11	CPF11	RAM Fault	243
CPF12	CPF12	FLASH Memory Fault	243
CPF13	CPF13	Watchdog Circuit Exception	243
CPF14	CPF14	Control Circuit Fault	243
CPF16	CPF16	Clock Fault	243
CPF17	CPF17	Timing Fault	243
CPF18	CPF18	Control Circuit Fault	243
CPF19	CPF19	Control Circuit Fault	244

LED Operator Display		Name	Page
CPF20 or CPF21	CPF20or CPF21	RAM Fault	244
		FLASH Memory Fault	244
		Watchdog Circuit Exception	244
		Clock Fault	244
oH3	oH3	Motor Overheat 1 (PTC input)	247
oH4	oH4	Motor Overheat 2 (PTC input)	248
oL1	oL1	Motor Overload	248
oL2	oL2	Drive Overload	248
oL3	oL3	Overtorque Detection 1	249
oL4	oL4	Overtorque Detection 2	249
oL5	oL5	Mechanical Weakening Detection 1	249
oL7	oL7	High Slip Braking oL	249
oPr	oPr	Operator Connection Fault	249
CPF22	CPF22	A/D Conversion Error	244
CPF23	CPF23	PWM Feedback Data Fault	244
CPF24	CPF24	Drive Capacity Signal Fault	244
dEv	dEv	Excessive Speed Deviation (for Simple V/f with PG)	244
EF0	EF0	Option Card External Fault	244
EF1 to EF7	EF1 to EF7	External Fault (input terminal S1 to S7)	244
FbH	FbH	Excessive PID Feedback	245
FbL	FbL	PID Feedback Loss	245

LED Operator Display		Name	Page
GF	GF	Ground Fault	245
LF	LF	Output Phase Loss	245
LF2	LF2	Output Open Phase	246
oC	oC	Overcurrent	246
oFA00	oFA00	Option Card Fault (port A)	246
oH	oH	Heatsink Overheat	247
oH1	oH1	Heatsink Overheat	247
PGo	PGo	PG Disconnect (for Simple V/f with PG)	250
rH	rH	Dynamic Braking Resistor	251
rr	rr	Dynamic Braking Transistor	251
SEr	SEr	Too Many Speed Search Restarts	251
STO	STO	Pull-Out Detection	251
UL3	UL3	Undertorque Detection 1	251
UL4	UL4	Undertorque Detection 2	251
UL5	UL5	Mechanical Weakening Detection 2	251
Uv1	Uv1	Undervoltage	252
Uv2	Uv2	Control Power Supply Undervoltage	252
Uv3	Uv3	Soft Charge Circuit Fault	252
oS	oS	Overspeed (for Simple V/f with PG)	249
ov	ov	Overvoltage	249
PF	PF	Input Phase Loss	250

Note: If faults CPF11 through CPF19 occur, the LED operator will display CPF00 or CPF11.

■ Minor Faults and Alarms

When a minor fault or alarm occurs, the ALM LED flashes and the text display shows an alarm code. A fault has occurred if the text remains lit and does not flash. *Refer to Alarm Detection on page 253*. An overvoltage situation, for example, can trigger both faults and minor faults. It is therefore important to note whether the LEDs remain lit or if the LEDs flash.

Table 6.5 Minor Fault and Alarm Displays

LED Operator Display		Name	Minor Fault Output (H2-□□ = 10)	Page
bb	bb	Drive Baseblock	No output	253
bUS	bUS	Option Card Communications Error	YES	253
CALL	CALL	Serial Communication Transmission Error	YES	253
CE	CE	MEMOBUS/Modbus Communication Error	YES	253
CrSt	CrSt	Can Not Reset	YES	253
dEv	dEv	Excessive Speed Deviation (for Simple V/f with PG)	YES	254
dnE	dnE	Drive Disabled	YES	254
EF	EF	Run Command Input Error	YES	254
EF0	EF0	Option Card External Fault	YES	254
EF1 to EF7	EF1 to EF7	External Fault (input terminal S1 to S7)	YES	255
FbH	FbH	Excessive PID Feedback	YES	255
FbL	FbL	PID Feedback Loss	YES	255
Hbb	Hbb	Safe Disable Signal Input	YES	255
HbbF	HbbF	Safe Disable Signal Input	YES	255
SE	SE	MEMOBUS/Modbus Test Mode Fault	YES	—
oL5	oL5	Mechanical Weakening Detection 1	YES	249
UL5	UL5	Mechanical Weakening Detection 2	YES	251
dWAL	dWAL	DriveWorksEZ Alarm	YES	244
HCA	HCA	Current Alarm	YES	256
oH	oH	Heatsink Overheat	YES	256
oH2	oH2	Drive Overheat	YES	256
oH3	oH3	Motor Overheat	YES	256
oL3	oL3	Overtorque 1	YES	256
oL4	oL4	Overtorque 2	YES	257
oS	oS	Overspeed (for Simple V/f with PG)	YES	257

LED Operator Display		Name	Minor Fault Output (H2-□□ = 10)	Page
ov	ov	Overvoltage	YES	257
PASS	PASS	MEMOBUS/Modbus Test Mode Complete	No output	257
PGo	PGo	PG Disconnect (for Simple V/f with PG)	YES	257
rUn	rUn	During Run 2, Motor Switch Command Input	YES	258
rUnC	rUnC	Run Command Reset	YES	258
UL3	UL3	Undertorque 1	YES	258
UL4	UL4	Undertorque 2	YES	258
Uv	Uv	Undervoltage	YES	258

■ Operation Errors

Table 6.6 Operation Error Displays

LED Operator Display		Name	Page
oPE01	oPE01	Drive Unit Setting Error	259
oPE02	oPE02	Parameter Setting Range Error	259
oPE03	oPE03	Multi-Function Input Setting Error	259
oPE04	oPE04	Terminal Board Mismatch Error	260
oPE05	oPE05	Run Command Selection Error	260
oPE07	oPE07	Multi-Function Analog Input Selection Error	260

LED Operator Display		Name	Page
oPE08	oPE08	Parameter Selection Error	260
oPE09	oPE09	PID Control Selection Error	260
oPE10	oPE10	V/f Data Setting Error	261
oPE11	oPE11	Carrier Frequency Setting Error	261
oPE13	oPE13	Pulse Train Monitor Selection Error	261

10. WARRANTY AND RETURNS

WARRANTY POLICY FOR THE LAVINA® S-E MACHINE

Superabrasive Ltd. guarantees that the original purchaser of the Lavina® S-E machine will be covered against defects in material and workmanship for a period of 2 years from the date of delivery or 500 hours of use whichever comes first.

The following conditions pertain to this warranty:

- Applies only to the original owner and it is not transferable.
- Machine must not be dismantled and tampered with in any way.
- Covered components proven defective will be repaired or replaced at no charge. Covered components include motors, bearings and switches.
- This warranty does not apply to any repair arising from misuse, neglect or abuse, or to repair of proprietary parts.
- This warranty does not apply to products with aftermarket alterations, changes, or modifications.
- This warranty is in lieu of and excludes every condition of warranty not herein expressly set out and all liability for any form of consequential loss or damage is hereby expressly excluded.
- This warranty is limited to repair or replacement of covered components and reasonable labor expenses.
- All warranty returns must be shipped freight prepaid.

The above warranty conditions may be changed only by Superabrasive. Superabrasive reserves the right to inspect and make a final decision on any machine returned under this warranty. This warranty applies to new, used and demo machines.

Superabrasive does not authorize any person or representative to make any other warranty or to assume for us any liability in connection with the sale and operation of our products

RETURN POLICY FOR LAVINA® S-E MACHINES

The Lavina® S-E machines may be returned, subject to the following terms:

In no case, a machine is to be returned to Superabrasive Ltd. for credit or repair without prior authorization. Please contact Superabrasive Ltd. or your local distributor for an authorization and issuance of a return authorization number. This number along with the serial number of the machine must be included on all packages and correspondence. Machines returned without prior authorization will remain property of the sender and Superabrasive Ltd. will not be responsible for these.

11. DISPOSAL

If your machine after time is not usable or needs to be replaced, send the machine back to Superabrasive or a local distributor, where a professional disposal complying with the environment laws and directives is guaranteed.

12. MANUFACTURER'S CONTACTS

If you need to contact Superabrasive Ltd. with technical support questions, below is the contact information.

Address:	Superabrasive Ltd.	Email:	factory@superabrasive.com
	Rabotnicheska 2A	Tel.:	+359 431 6 44 77
	BG-6140 Krun	Fax:	+359 431 6 44 66
	Bulgaria	Website:	www.superabrasive.com

13. SPARE PARTS

ASSEMBLY AND PARTS SPECIFICATIONS

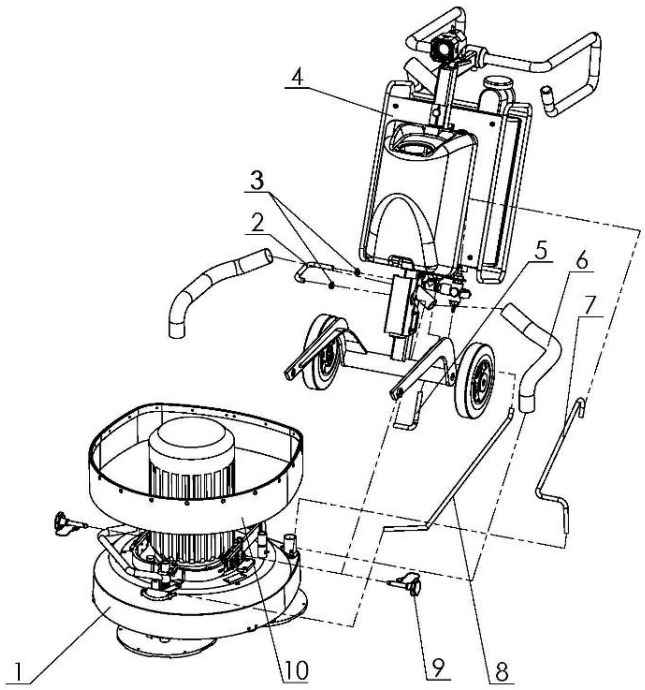

13.1 LAVINA®25-S-E GENERAL PARTS /FOR MACHINES PRODUCED BEFORE JAN.1 2014/				
Model	**No.**	**Item No.**	**Description**	**Pcs.**
L25-S-E	1	L25S-10.00.00	Main Head	1
L25-S-E	2	MAR8.25	Tube	1
L25-S-E	3	10-16DIN3017	Clamp	2
L25-S-E	4	L25SE-20.00.00	Carriage	1
L25-S-E	5	MAR8.20	Tube	1
L25-S-E	6	D40L670	Vacuum Hose	2
L25-S-E	7	MAR8.84	Tube	1
L25-S-E	8	MAR8.110	Tube	1
L25-S-E	9	L25GS-03.00.00	Pin Assembly	2
L25-S-E	10	L25SPS-05.00.00.00	Guard Assembly	1

13.1 LAVINA®25-S -E GENERAL PARTS /FOR MACHINES PRODUCED AFTER JAN.1 2014/				
Model	**No.**	**Item No.**	**Description**	**Pcs.**
L25-S-E	1	L25S-10.00.00-01	Main Head	1
L25-S-E	2	MAR8.71	Tube	1
L25-S-E	3	10-16DIN3017	Clamp	2
L25-S-E	4	L25SE-20.00.00-01	Carriage	1
L25-S-E	5	MAR8.25	Tube	1
L25-S-E	6	D40L670	Vacuum Hose	2
L25-S-E	7	MAR8.85	Tube	2
L25-S-E	8	MAR8.110	Tube	1
L25-S-E	9	L25GS-03.00.00	Pin Assembly	2
L25-S-E	10	L25SPS-05.00.00.00	Guard Assembly	1

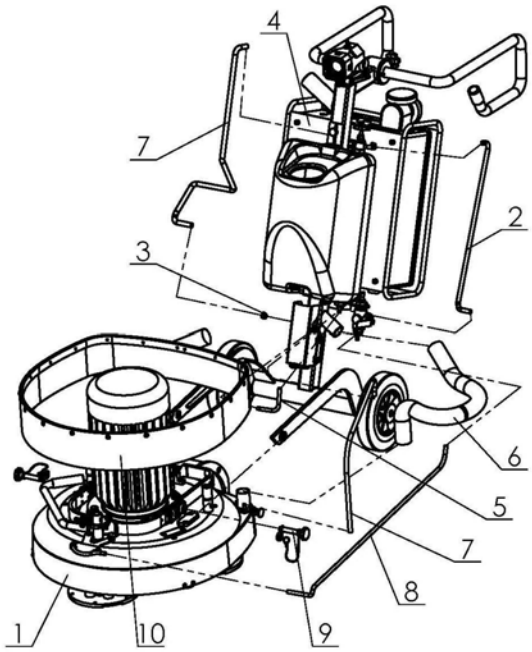

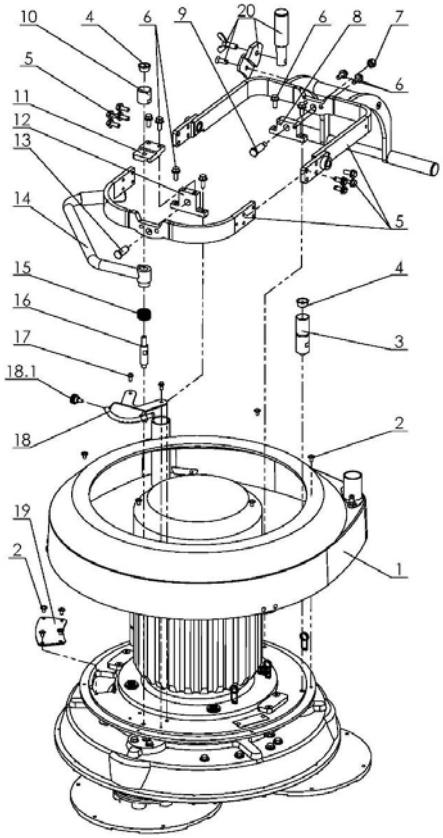

13.2 LAVINA®25-S-E TOP COVER PARTS 1 /FOR MACHINES PRODUCED BEFORE JAN.1 2014/				
Model	**No.**	**Item No.**	**Description**	**Pcs.**
L25-S-E	1	L25GS-19.00.00	Top Cover Assembly	1
L25-S-E	2	M6X10ISO7380F	Screw	10
L25-S-E	3	L25NSPS-07.00.00.05	Back Weight Holder	2
L25-S-E	4	L25SPS-07.00.00.29	Rubber Buffer	3
L25-S-E	5	L25GS-18.00.00	Frame Assembly	1
L25-S-E	6	M8X20DIN6921	Bolt	8
L25-S-E	7	M10DIN982	Nut	1
L25-S-E	8	L25GS-15.00.03	Support Back	1
L25-S-E	9	L25GS-10.00.31	Pin Back	1
L25-S-E	10	L25NP-07.00.00.10	Cup	1
L25-S-E	11	L25GS-15.00.04	Support Top	1
L25-S-E	12	L25GS-15.00.02	Support Front	1
L25-S-E	13	L25GS-10.00.30	Pin Front	1
L25-S-E	14	L25GS-15.02.00	Bar	1
L25-S-E	15	L25SPS-07.00.00.25	Spring	1
L25-S-E	16	L25SPS-07.00.00.26	Stud	1
L25-S-E	17	M5X12DIN6921	Bolt	2
L25-S-E	18	A29.10.00	Spray Unit	1
L25-S-E	18.1	H766-21	Knob Bolt	1
L25-S-E	19	L25S-15.00.23	Inspection Cover	1
L25-S-E	20	L25GS-18.30.00	Clamp head	1

13.2 LAVINA®25-S-E TOP COVER PARTS 1 /FOR MACHINES PRODUCED AFTER JAN.1 2014/				
Model	**No.**	**Item No.**	**Description**	**Pcs.**
L25-S-E	1	L25GS-19.00.00	Top Cover Assembly	1
L25-S-E	2	M6X10ISO7380F	Screw	10
L25-S-E	3	L25NSPS-07.00.00.05	Back Weight Holder	2
L25-S-E	4	L25SPS-07.00.00.29	Rubber Buffer	3
L25-S-E	5	L25GS-18.00.00	Frame Assembly	1
L25-S-E	6	M8X20DIN6921	Bolt	8
L25-S-E	7	M10DIN982	Nut	1
L25-S-E	8	L25GS-15.00.03	Support Back	1
L25-S-E	9	L25GS-10.00.31	Pin Back	1
L25-S-E	10	L25NP-07.00.00.10	Cup	1
L25-S-E	11	L25S-15.00.04	Support Top L25-S	1
L25-S-E	12	L25GS-15.00.02	Support Front	1
L25-S-E	13	L25GS-10.00.30	Pin Front	1
L25-S-E	14	L25S-15.10.00	Bar Assembly L25-S	1
L25-S-E	15.1	L25S-15.10.03	Spring L25-S	1
L25-S-E	15.2	L25S-15.10.02	Lever	1
L25-S-E	16	L25SPS-07.00.00.26	Stud	1
L25-S-E	17	M5X12DIN6921	Bolt	2
L25-S-E	18	A29.10.00	Spray Unit	1
L25-S-E	18.1	H766-21	Knob Bolt	1
L25-S-E	19	L25S-15.00.23	Inspection Cover	1
L25-S-E	20	L25GS-18.30.00	Clamp head	1

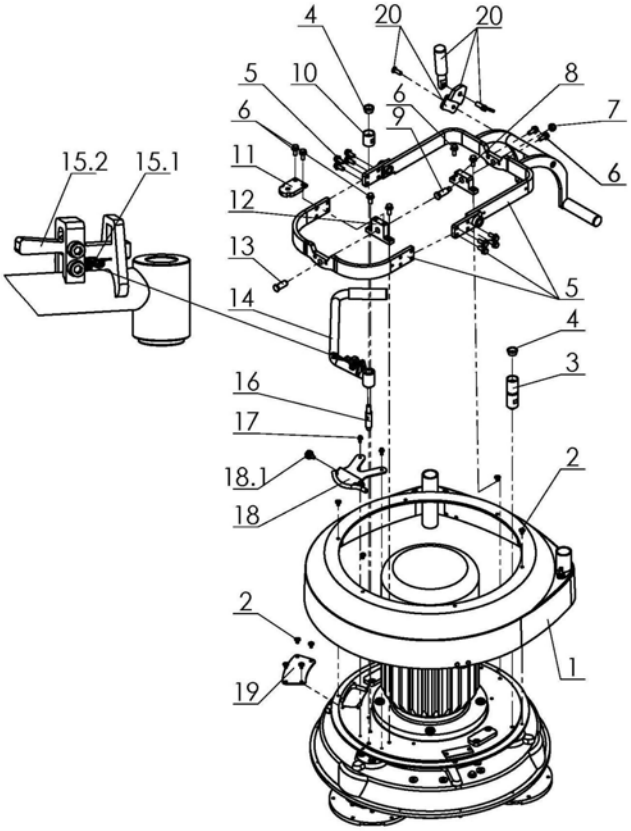

13.3 LAVINA®25-S-E TOP COVER PARTS 2				
Model	**No.**	**Item No.**	**Description**	**Pcs.**
L25-S-E	1	L25GS-19.00.01	Top Cover	1
L25-S-E	2	L25GS-19.10.00	Vacuum Port	1
L25-S-E	3	L25GS-19.20.00	Water Fitting	1
L25-S-E	4	M12DIN985	Nut	1
L25-S-E	5	M5DIN125A	Washer	3
L25-S-E	6	M5DIN127B	Spring Washer	3
L25-S-E	7	M5DIN934	Nut	3
L25-S-E	8	L25SPS-04.01.00.00	Vacuum Port	1
L25-S-E	9	M5X16DIN84A	Screw	3

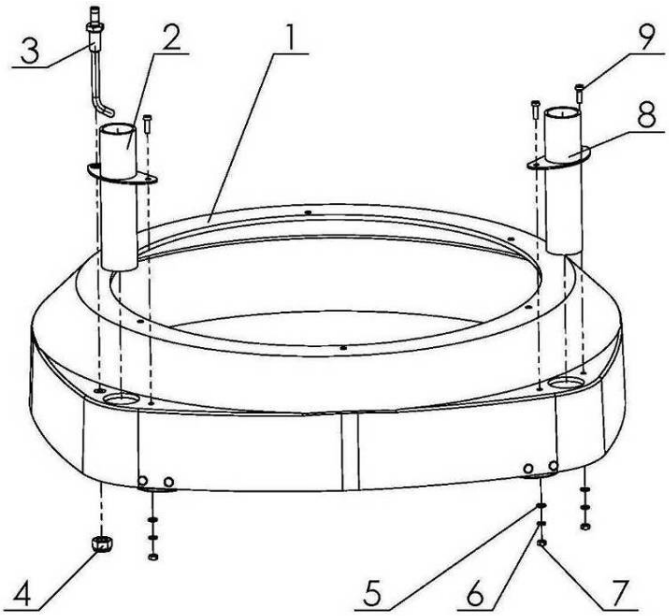

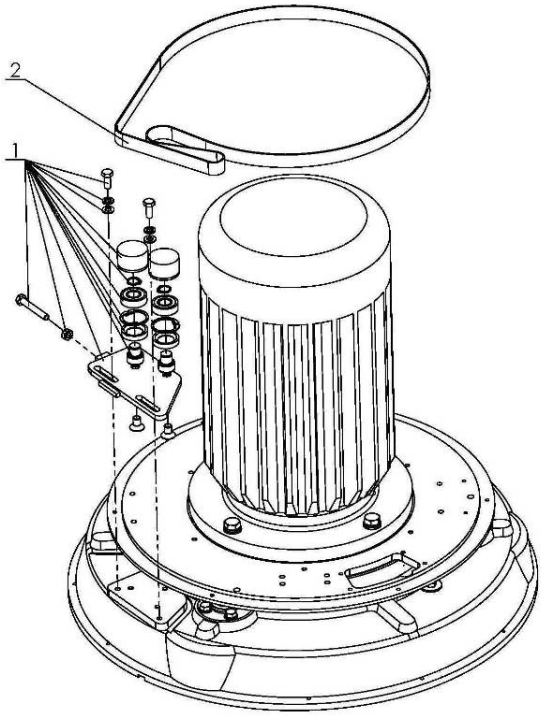

13.4 LAVINA®25-S-E PLANETARY DRIVE PARTS				
Model	**No.**	**Item No.**	**Description**	**Pcs.**
L25-S-E	1	L25S-17.00.00	Planetary Tensioning Unit	1
L25-S-E	2	TC-20EF1500X20X2	Endless Transmission Flat Belt	1

13.5 LAVINA®25-S-E GUARD PARTS				
Model	**No.**	**Item No.**	**Description**	**Pcs.**
L25-S-E	1	D4X10DIN7337 LF12	Rivet	19
L25-S-E	2	M4DIN9021A	Washer	19
L25-S-E	3	L25SPS-05.00.00.01	Ring	1
L25-S-E	4	L25SPS-05.00.00.02	Guard	1

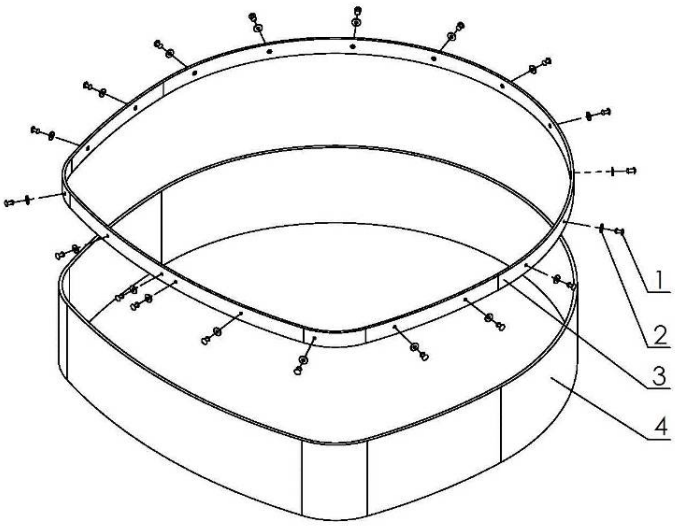

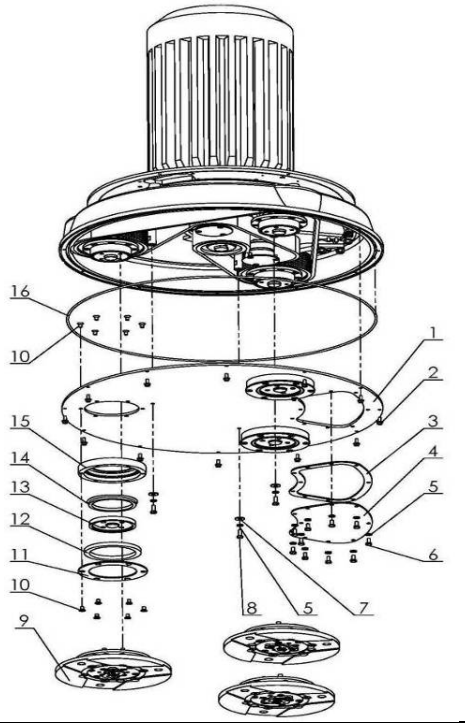

13.6 LAVINA®25-S-E BOTTOM COVER PARTS 1				
Model	**No.**	**Item No.**	**Description**	**Pcs.**
L25-S-E	1	L25LS-14.00.00	Bottom Cover Assembly	1
L25-S-E	2	M5X12DIN6921	Bolt	12
L25-S-E	3	L25LS-14.00.05	Sealer Inspection Cover	1
L25-S-E	4	L25L-10.00.09	Inspection Cover	1
L25-S-E	5	M6DIN127B	Spring Washer	13
L25-S-E	6	M6X12DIN933	Bolt	10
L25-S-E	7	M6DIN9021A	Washer	3
L25-S-E	8	M6X16DIN933	Bolt	3
L25-S-E	9	A31.00.00	Tool Holder A31	3
L25-S-E	10	M6X10DIN7991	Screw	36
L25-S-E	11	L25LS-14.00.03	Outer Cover	3
L25-S-E	12	110X90X8.5	Felt Ring	3
L25-S-E	13	A37.00.01	Adaptor	3
L25-S-E	14	TWVA00800	V-Ring Type A	3
L25-S-E	15	L25LS-14.00.02	Flange	3
L25-S-E	16	D4X2X2000	Seal	1

13.7 LAVINA®25-S-E BOTTOM COVER PARTS 2				
Model	**No.**	**Item No.**	**Description**	**Pcs.**
L25-S-E	1	S252	Electro Motor	1
L25-S-E	2	M12DIN125A	Washer	4
L25-S-E	3	M12DIN127B	Spring Washer	4
L25-S-E	4	M12X30DIN933	Bolt	4
L25-S-E	5	D4X2X850	Seal	1
L25-S-E	6	L25S-15.01.00	Base Plate	1
L25-S-E	7	L25P-01.03.00.09	Flange	1
L25-S-E	8	M5DIN7980	Spring Washer	4
L25-S-E	9	M5X16DIN912	Screw	4
L25-S-E	10	L25S-15.00.22	Planetary Pulley	1
L25-S-E	11	M6X25DIN7991	Screw	6
L25-S-E	12	L25L-13.00.00	Deflection Pulley	1
L25-S-E	13	M8DIN127B	Spring Washer	11
L25-S-E	14	M8DIN934	Nut	11
L25-S-E	15	L25L-10.00.15	Sector	1
L25-S-E	16	L25L-12.00.00	Tensioning Support	1
L25-S-E	17	L25L-10.00.16	Sector	1
L25-S-E	18	M6DIN127B	Spring Washer	1
L25-S-E	19	M6X30DIN933	Bolt	1
L25-S-E	20	PL2476-975L-9	Endless Transmission V Belt	1
L25-S-E	21	DIN6885A8X7X36	Key	1
L25-S-E	22	L25S-10.00.22	Central Pulley	1
L25-S-E	23	L25SPS-00.00.00.15	Front Washer	1
L25-S-E	24	M6X20DIN7991	Screw	1
L25-S-E	25	L25L-10.00.14	Sector	1
L25-S-E	26	L25L-10.00.07	Support	2
L25-S-E	27	L25L-10.00.08	Washer	2
L25-S-E	28	L32C-14.20.04	Nut	1
L25-S-E	29	M10DIN934	Nut	2
L25-S-E	30	L25L-10.00.12	Sector	1
L25-S-E	31	L25L-10.00.13	Sector	1
L25-S-E	32	L25L-10.00.11	Sector	1
L25-S-E	33	L25L-10.00.19	Distance Bolt	3
L25-S-E	34	D6X2	O-Ring	3

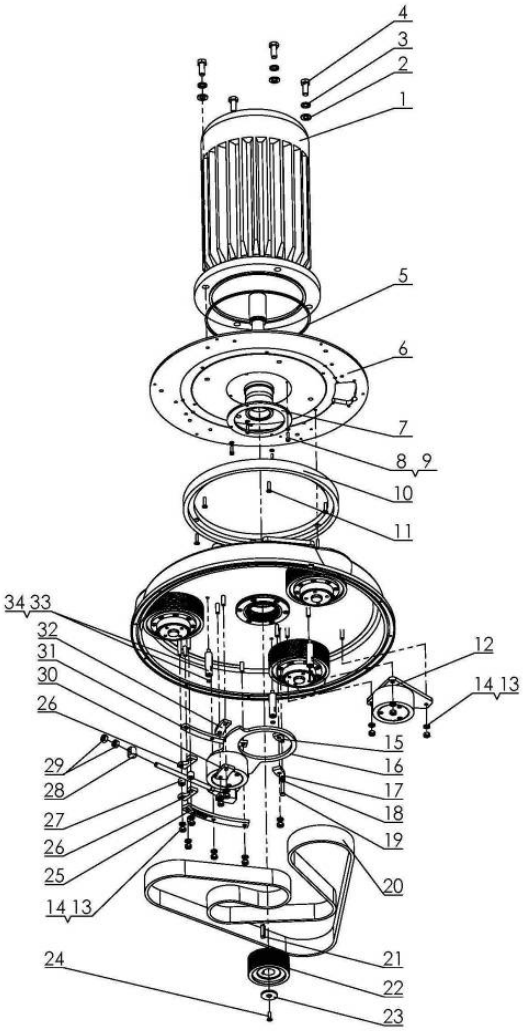

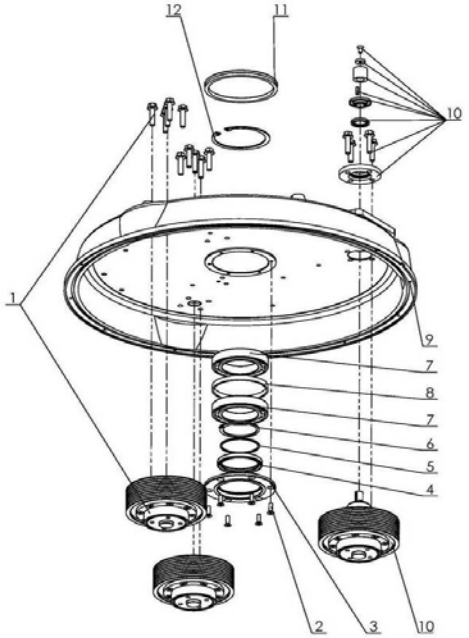

13.8 LAVINA®25-S-E PULLEY UNIT PARTS				
Model	**No.**	**Item No.**	**Description**	**Pcs.**
L25-S-E	1	L25LS-11.00.00	Pulley Unit Assembly	2
L25-S-E	2	M6X20DIN7991	Screw	6
L25-S-E	3	L25L-10.00.21	Cap	1
L25-S-E	4	TRA000650	Rotary Seal	1
L25-S-E	5	L25SPS-00.00.00.23	Compensating Ring	1
L25-S-E	6	B65DIN471	Retaining Ring	1
L25-S-E	7	6013	Roller Assembly	2
L25-S-E	8	L25SPS-00.00.00.34	Distance Ring	1
L25-S-E	9	L25LS-10.00.06	Disc	1
L25-S-E	10	L25LS-16.00.00	Driving Pulley Unit	1
L25-S-E	11	TWVA01200	V-Ring Type A	1
L25-S-E	12	A10013943	Retaining Ring	1

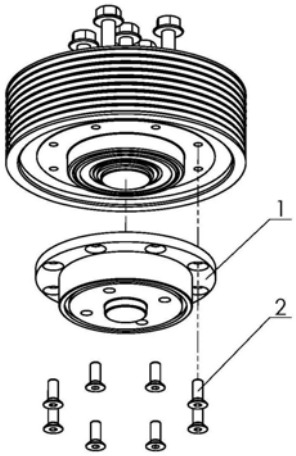

13.8a. LAVINA®25-S-E PULLEY UNIT ASSEMBLY				
Model	**No.**	**Item No.**	**Description**	**Pcs.**
L25-S-E	1	L25LS-16.00.03	Flange	1
L25-S-E	2	M6X16DIN7991	Screw	8

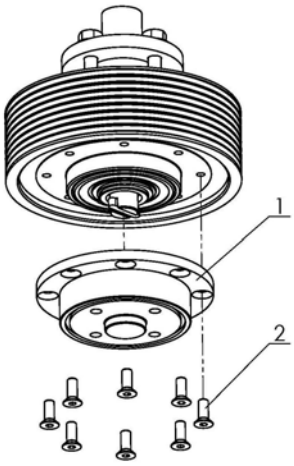

13.8b. LAVINA®25-S-E DRIVING PULLEY UNIT				
Model	**No.**	**Item No.**	**Description**	**Pcs.**
L25-S-E	1	L25LS-16.00.03	Flange	1
L25-S-E	2	M6X16DIN7991	Screw	8

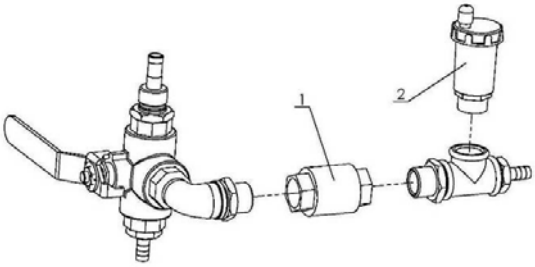

13.9 LAVINA®25-S-E WATER SUPPLY PARTS /FOR MACHINES PRODUCED BEFORE JAN.1 2014/				
Model	**No.**	**Item No.**	**Description**	**Pcs.**
L25-S-E	1	A29.21.00	Backflow Preventer	1
L25-S-E	2	A29.22.00	Vent Valve	1

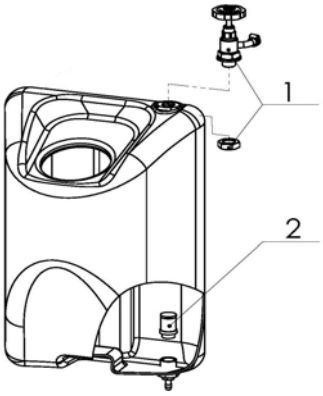

13.9 LAVINA®25-S-E WATER TANK PARTS /FOR MACHINES PRODUCED AFTER JAN.1 2014/				
Model	**No.**	**Item No.**	**Description**	**Pcs.**
L25-S-E	1	A29.50.00	Regulator	1
L25-S-E	2	1/2"	Filter	1

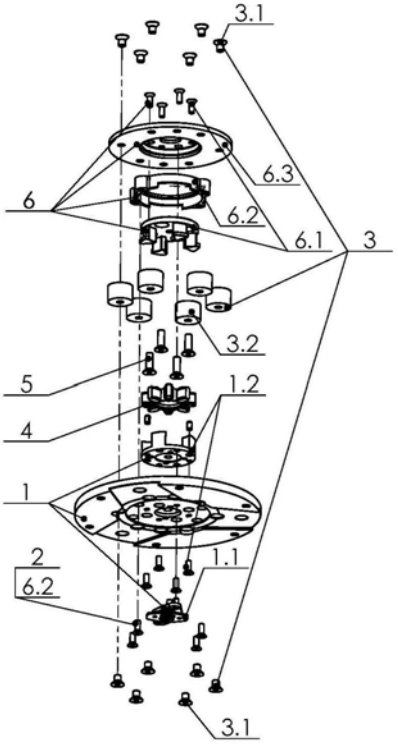

13.10 LAVINA®25-S-E TOOL HOLDER PARTS				
Model	**No.**	**Item No.**	**Description**	**Pcs.**
25-S-E	1	A31.10.00	Quick Change Assembly	1
25-S-E	1.1	A31.12.00	Keylock Set	1
25-S-E	1.2	A31.10.02-K	Copling 2 with screws	1
25-S-E	2	M6X16DIN7991	Screw	4
25-S-E	3	A25.00.10-K	Buffer with two screw	6
25-S-E	3.1	M8X12DIN7991	Screw	12
25-S-E	3.2	A25.00.10	Buffer	6
25-S-E	4	A25.00.05-02	Spider	1
25-S-E	5	M8X25DIN7991-10.9	Screw	4
25-S-E	6	A31.20.00	Flange	1
25-S-E	6.1	A31.20.03-K	Copling 1 with screws	1
25-S-E	6.2	A31.20.02-K	Security ring	1
25-S-E	6.3	A31.20.01	Flange A31	1

13.11 LAVINA®25-S-E CARRIAGE PARTS /FOR MACHINES PRODUCED BEFORE JAN.1 2014/				
Model	**No.**	**Item No.**	**Description**	**Pcs.**
L25-S-E	1	L25S-21.00.00	Frame	1
L25-S-E	2	L25G-23.00.00	Handle Assembly	1
L25-S-E	3	L25SPS-02.00.00.18-01	Nut	2
L25-S-E	4	A58194	Swivel Bolt	1
L25-S-E	5	L25G-20.00.04	Wheel	2
L25-S-E	6	L32D-20.00.03	Wheel Cap	2
L25-S-E	7	M10X16DIN7991	Screw	2
L25-S-E	8	L20NS-30.30.00	Lamp Unit Incl. Cable	1
L25-S-E	9	A58165	Swivel Bolt	1
L25-S-E	10	A33.00.00	Tank	1
L25-S-E	11	L25P-02.00.00.01	Top Bracket	1
L25-S-E	12	M5UN732	Washer	1
L25-S-E	13	T34391	Knob Bolt	1
L25-S-E	14	1040	Water Pump	1
L25-S-E	15	L25S-20.00.26	Guard	1
L25-S-E	16	M5DIN985	Nut	4
L25-S-E	17	M5X20DIN933	Bolt	4
L25-S-E	18	A29.20.00	Water Flow Control Unit	1
L25-S-E	19	A29.20.01-01	Flow Unit Base	1
L25-S-E	20	M5X12DIN6921	Bolt	2
L25-S-E	21	M20X1.5DIN439B	Nut	1
L25-S-E	22	M8X25DIN912	Screw	4
L25-S-E	23	L25S-22.00.00	Guard	1
L25-S-E	24	M8X12DIN7991	Screw	4
L25-S-E	25	L25SE-30.00.00	Control Box L25-S-E	1
L25-S-E	26	M8DIN125A	Washer	4
L25-S-E	27	M8DIN127B	Spring Washer	4
L25-S-E	28	M8DIN934	Nut	4

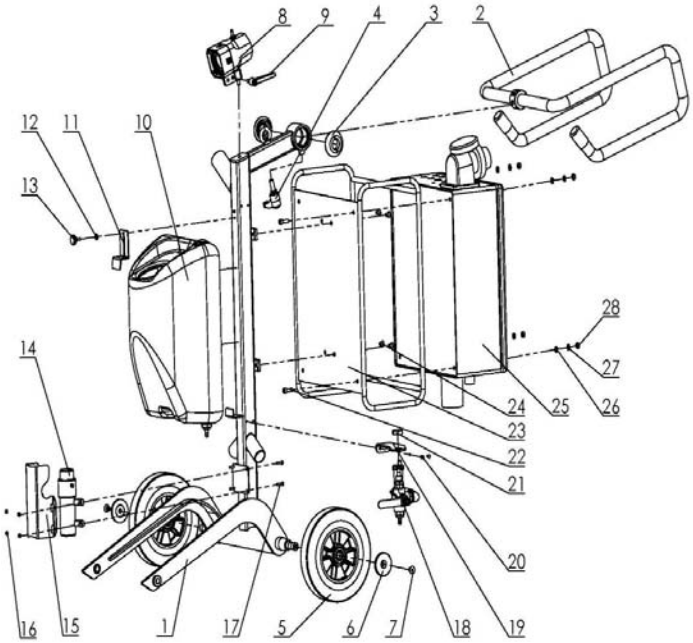

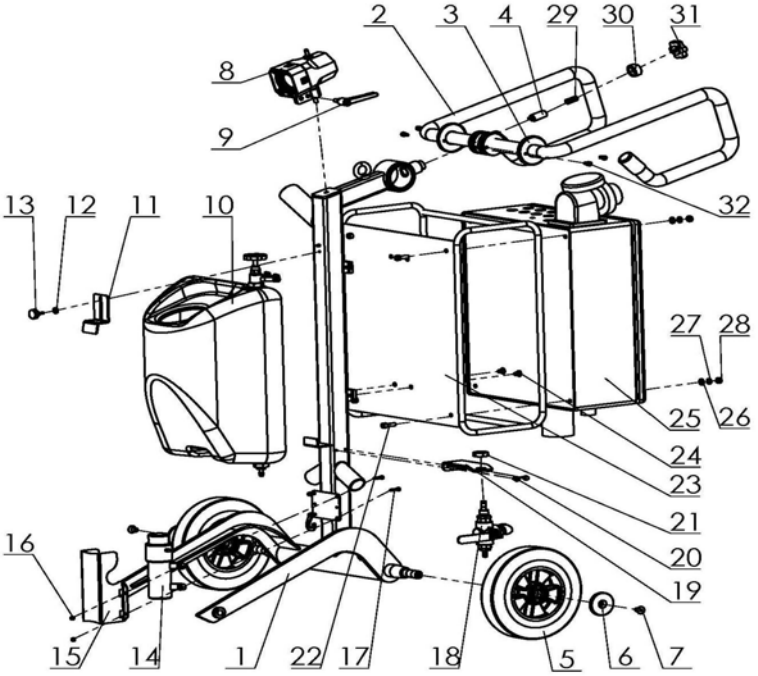

13.11 LAVINA®25-S-E CARRIAGE PARTS
/FOR MACHINES PRODUCED AFTER JAN.1 2014/

Model	No.	Item No.	Description	Pcs.
L25-S-E	1	L25S-21.00.00-01	Frame	1
L25-S-E	2	L25S-23.10.00	Handle Assembly	1
L25-S-E	3	L25S-23.00.02	End Cover	2
L25-S-E	4	L25S-23.00.06	Locking bit	1
L25-S-E	5	L25G-20.00.04	Wheel	2
L25-S-E	6	L32D-20.00.03	Wheel Cap	2
L25-S-E	7	M10X16DIN7991	Screw	2
L25-S-E	8	L20NS-30.30.00	Lamp Unit Incl. Cable	1
L25-S-E	9	A58165	Swivel Bolt	1
L25-S-E	10	A33.10.00	Tank Assembly	1
L25-S-E	11	L25P-02.00.00.01	Top Bracket	1
L25-S-E	12	M5UN732	Washer	1
L25-S-E	13	T34391	Knob Bolt	1
L25-S-E	14	1040	Water Pump	1
L25-S-E	15	L25S-20.00.26	Guard	1
L25-S-E	16	M5DIN985	Nut	4
L25-S-E	17	M5X20DIN933	Bolt	4
L25-S-E	18	A29.40.00	Water Flow Control Unit	1
L25-S-E	19	A29.20.01-01	Flow Unit Base	1
L25-S-E	20	M5X12DIN6921	Bolt	2
L25-S-E	21	M20X1.5DIN439B	Nut	1
L25-S-E	22	M8X25DIN912	Screw	4
L25-S-E	23	L25S-22.00.00	Guard	1
L25-S-E	24	M8X12DIN7991	Screw	4
L25-S-E	25	L25SE-30.00.00	Control Box L25-S-E	1
L25-S-E	26	M8DIN125A	Washer	4
L25-S-E	27	M8DIN127B	Spring Washer	4
L25-S-E	28	M8DIN934	Nut	4
L25-S-E	29	L25S-23.00.07	Spring L25-S	1
L25-S-E	30	L25S-23.00.09	Nut	1
L25-S-E	31	F17840.TM08x40	Knob Bolt	1
L25-S-E	32	M6X12DIN912	Screw	4

13.13 Lavina® 25-S-E Control Box Parts 380 Volt

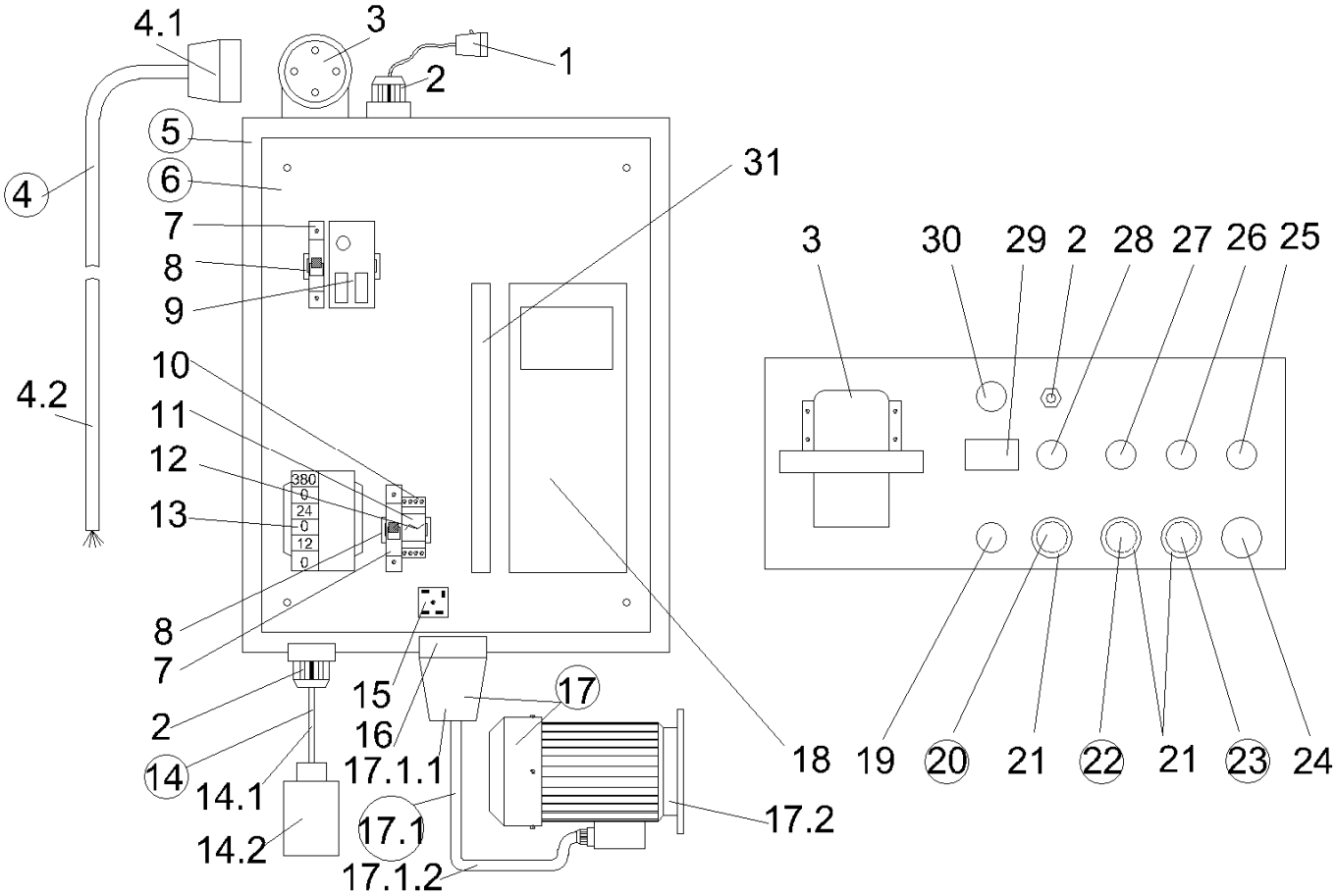

13.13 LAVINA®25-S-E CONTROL BOX PARTS 380 VOLT								
Model	No.	Item No.	Description	Pcs.	No.	Item No.	Description	Pcs.
L25-S-E	1	L20NS-30.30.00	Lamp Unit Incl. Cable	1	17	L25HVS-30.20.00	Electro Motor Assembly	1
L25-S-E	2	L20NS-30.10.01	Cable Gland	2	17.1	L20NHVS-30.20.10	Plug with Cable	1
L25-S-E	3	L20NSE-30.10.02	Plug on Control Board	1	17.1.1	L20NHVS -30.20.11	Plug	1
L25-S-E	4	L20NSE-30.02.00	Cable with Connector	1	17.1.2	L20NHVS-30.20.12	Cable for Electro Motor	1
L25-S-E	4.1	L20NSE-30.02.01	Connector	1	17.2	S252	Electro Motor	1
L25-S-E	4.2	L20NSE-30.02.02	Cable	1	18	L25HVS-30.11.09	Inverter Yaskawa (V1000)	1
L25-S-E	5	L25HVS-30.10.00	Metal Box	1	19	L20NS-30.10.04	Potentiometer	1
L25-S-E	6	L25HVS-30.11.00	Metal Box Plate	1	20	L20NS-30.10.05	Reset Button	1
L25-S-E	7	L20NS-30.11.01	Circuit Breaker	2	21	L20NS-30.10.06	Cap	3
L25-S-E	8	L20NS-30.11.02	Rail	2	22	L20NS-30.10.07	Off Button	1
L25-S-E	9	L20NHVS-30.11.03	Circuit Breaker	1	23	L20NS-30.10.08	On Button	1
L25-S-E	10	L20NS-30.11.04	Rail Base	1	24	L20NS-30.10.10	Emergency Stop Button	1
L25-S-E	11	L20NS-30.11.05	Rail	1	25	L20NS-30.10.11	Switch Button F/R	1
L25-S-E	12	L20NS-30.11.06	Rail Bracket	1	26	L20NS-30.10.12	Green LED Power	1
L25-S-E	13	L20NSE-30.11.07	Transformer	1	27	L20NS-30.10.13	Water Pump Button	1
L25-S-E	14	L20NS-30.40.00	Water Pump with Cable	1	28	L20NS-30.10.14	Blue Led Alarm	1
L25-S-E	14.1	L20NS-30.40.01	Cable for Water Pump	1	29	L20NS-30.10.15	Revolution counter	1
L25-S-E	14.2	1040	Water Pump		30	L25S-30.10.15	Switch Button P/G	1
L25-S-E	15	L20NS-30.11.08	Rectifier	1	31	L20NSE-30.11.01	Filter	1
L25-S-E	16	L20NHVS-30.10.03	Socket	1				